P2.120 G-U(TC)
P2.160 G-U(TC)
P2.210 G-U(TC)

elco

Technische Daten
Données techniques
Dati tecnici
Technische gegevens
Technical data

de, fr, it 4200 1050 5400
nl, en 4200 1050 6000

Elektro- und Hydraulikschema
Schémas électrique et hydraulique
Schemi elettrico e idraulico
Elektrische en hydraulische schema
Electric and hydraulic diagrams

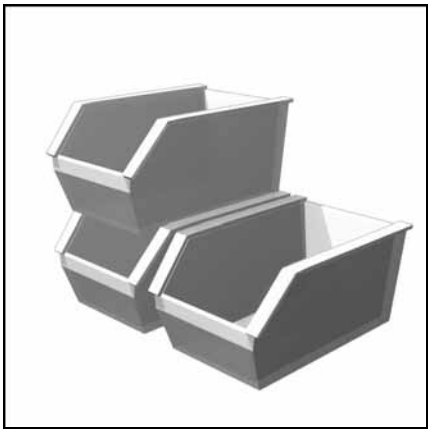

Ersatzteilliste
Pièces de rechange
Parti ricambi
Reserve onderdelen lijst
Spare parts list

07/2014 - Art. Nr. 4200 1050 3100C

					P2.120 G-U (TC)	P2.160 G-U (TC)	P2.210 G-U (TC)
Brennerleistung min./max. kW	**Puissance du brûleur** min./max. kW	**Potenza del bruciatore** min./max. kW	**Branderbelasting** min./max. kW	**Burner power** min./max. kW	70-120	100-160	140-210
Regelverhältnis	**Rapport de régulation**	**Rapporto di regolazione**	**Regelbereik**	**Regulating ratio**	1:1		
Brennstoff Erdgas (G20) Erdgas (G25) Flüssiggas (G31)	**Combustible** Gaz naturel (G20) Gaz naturel (G25) Gaz propane (G31)	**Combustibile** Gas naturale (G20) Gas naturale (G25) GPL (G31)	**Brandstof** Aardgas (G20) Aardgas (G25) Propaangas (G31)	**Fuel** Natural gas (G20) Natural gas (G25) Liquefied Petroleum Gas (G31)	(G20) H_u = 9,45 kWh / m^3 (G25) H_u = 8,13 kWh / m^3 (G31) H_u = 24,44 kWh /m^3		
CE Nummer	**Numéro d'agrément CE**	**Numero CE**	**CE-goedkeuringsnummer**	**CE Number**	1312 BQ 4069		
SVGW Nummer	**Numéro d'agrément SSIGE**	**Numero SSIGA**	**SVGW-goedkeuringsnummer**	**SVGW number**	-		
Emissionsklasse Typenprüfung nach EN 676 bei Erdgas : NOx < 80mg/kWh, bei Flüssiggas : NOx< 140mg/kWh unter Prüfbedingungen	**Classe d'émission** selon l'EN 676 en gaz naturels : NOx < 80mg/kWh, en propane : NOx< 140mg/kWh dans les conditions d'essai normalisées	**Classe di emissione** Prova di omologazione second. EN 676 con gas naturale: NOx < 80mg/kWh, con GPL: NOx< 140mg/kWh in condizioni di prova di omologazione	**Emissieklasse** volgens EN 676 met aardgas: NOx < 80mg/kWh, met propaan: NOx < 140 mg/kWh, onder genormaliseerde testomstandigheden	**Emissions class** Type check to EN 676 for natural gas: NOx < 80 mg/kWh, in propane: NOx< 140 mg/kWh under test conditions	3		
Feuerungsautomat	**Coffret de sécurité**	**Programmatore di sicurezza**	**Branderautomaat**	**Control unit**	TCG1xx		
Gasarmatur	**Rampe gaz**	**Rampa gas**	**Gasblok**	**Gas train**	**without TC :** MBDLE 407 B01 S20 **with TC :** MBDLE 407 B01 S22		**without TC :** MBDLE407 B01 S20 MBDLE 412 B01 S20 **with TC :** MBDLE 407 B01 S22 MBDLE 412 B01 S22
Gasanschluß	**Raccordement gaz**	**Allacciamento gas**	**Gasaansluiting**	**Gas connection**	Rp 3/4"		Rp 3/4" Rp 1"1/4
Gaseingangsdruck	**Pression d'entrée du gaz**	**Pressione di ingresso gas**	**Gasingangsdruk**	**Gas input pressure**	(G20), (G25): 20-300 mbar; (G31): 37-148 mbar		
Luftregulierung I Luftklappe **Luftregulierung II** Stauscheibe im Brennkopf	**Réglage de l'air I** Volet d'air **Réglage de l'air II** Déflecteur dans la tête	**Regolazione dell'aria I** Serranda dell'aria **Regolazione dell'aria II** Bocchettone con piastra forata nella testa	**Luchtregeling I** Luchtklep **Luchtregeling II** Stuwschijf in de kop	**Air regulation I** Air flap **Air regulation II** Turbulator in the head	x		
Luftklappensteuerung manuell	**Commande du volet d'air** manuelle	**Comando della serranda dell'aria** manuale	**Luchtklepaansturing** handmatig	**Air valve control** manual	x		
Luftdruckwächter (Einstellbereich)	**Manostat d'air** (plage de réglage)	**Pressostato aria** (campo di regolazione)	**Luchtdruk schakelaar** (instelbereik)	**Air pressure switch** (setting range)	0,5-5 mbar		1-10 mbar
Flammenwächter Ionisationssonde	**Surveillance de flamme** Sonde d'ionisation	**Sorveglianza della fiamma** Sonda di ionizzazione	**Vlambeveiliging** Ionisatiesonde	**Flame monitoring** Ionisation probe	x		
Zündtransformator	**Allumeur**	**Accenditore**	**Ontsteek Trafo**	**Igniter**	2P		
Elektromotor2840min.$^{-1}$	**Moteur 2840min.$^{-1}$**	**Motore 2840min.$^{-1}$**	**Motor 2840min.$^{-1}$**	**Motor 2840min.$^{-1}$**	160W		130W
Spannung	**Tension**	**Tensione**	**Spanning**	**Voltage**	230V - 50Hz		
Elektrische Leistungs-aufnahme (Betrieb)	**Puissance électrique absorbée** (en service)	**Potenza elettrica assorbita** (in servizio)	**Opgenomen elektrisch vermogen** (in werking)	**Power consumption** (in operation)	180W	245W	325W
Gewicht ca. kg	**Poids environ kg**	**Peso circa kg**	**Gewicht ongeveer kg**	**Approximateweight kg**	25		
Schutzart	**Indice de protection**	**Classe di protezione**	**Beschermingsindex**	**Protection level**	IP21		
Schalldruckpegel nach ISO9614 (LpA)	**Niveau acoustique** mesuré selon ISO9614 (LpA)	**Livello sonoro** misurato secondo ISO9614 (LpA)	**Geluidsniveau** gemeten volgens ISO9614 (LpA)	**Sound level** measured in accordance with ISO9614 (LpA)	62	64	65
Umgebungstemperatur Lagerung min./max.	**Température ambiante stockage min./max**	**Temperatura ambiente stoccaggio min./max**	**Omgevingstemperatuur opslag min./max**	**Ambient temperature storage min./max.**	- 20 ... + 70°C		
Umgebungstemperatur Betrieb min./max.	**Température ambiante fonctionnement : min./max**	**Temperatura ambiente impiego min./max**	**Omgevingstemperatuur werking: min./max**	**Ambient temperature use min./max.**	0 ... + 50°C		
Luftfeuchtigkeit	**Humidité relative de l'air**	**Umidità relativa dell'aria**	**Relatieve vochtigheid van de lucht**	**Air humidity**	max. 60% - 40 °C		

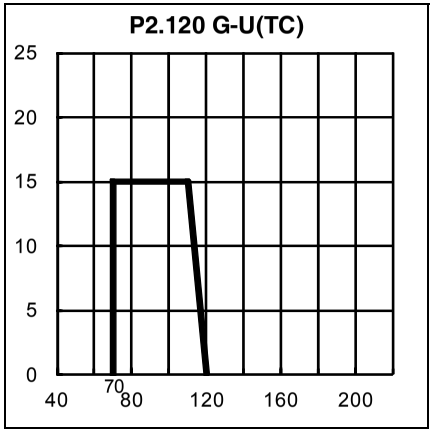

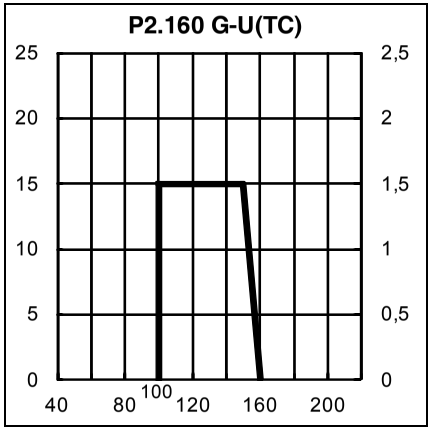

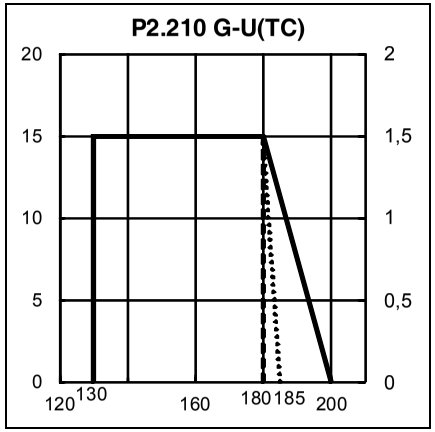

G20 20mbar
G25 25mbar

Arbeitsfelder
Das Arbeitsfeld zeigt die Brennerleistung in Abhängigkeit vom Feuerraumdruck. Es entspricht den Maximalwerten nach EN 676 gemessen am Prüfflammenrohr.
Bei der Brennerauswahl ist der Kesselwirkungsgrad zu berücksichtigen.
Berechnung der Brennerleistung:

$$Q_F = \frac{Q_N}{\eta} x 100$$

Q_F = Brennerleistung (kW)
Q_N = Kesselnennleistung (kW)
η = Kesselwirkungsgrad (%)

Erläuterung zur Typenbezeichnung:
P = PROTRON
G = Erdgas / Flüssiggas
2 = Baugröße
210 = Leistungskennziffer in kW
KN = Brennkopflänge normal
KL = Brennkopflänge lang

Courbes de puissance
La courbe de puissance représente la puissance du brûleur en fonction de la pression régnant dans le foyer. Elle correspond aux valeurs max. mesurées d'après la norme EN676, sur un tunnel normalisé.
Pour le choix du brûleur, il faut tenir compte du coefficient de rendement de la chaudière.
Calcul de la puissance du brûleur :

$$Q_F = \frac{Q_N}{\eta} x 100$$

Q_F = puissance du brûleur (kW)
Q_N = puissance nominale chaudière(kW)
η = rendement chaudière (%)

Légende :
P = PROTRON
G = Gaz naturel / gaz propane
2 = Dimension
210 = Référence de puissance en kW
KN = Tête de combustion de longueur normale
KL = Tête de combustion longue

Curva
Il campo di attività indica la potenza del bruciatore in funzione della pressione della camera di combustione. Corrisponde ai valori massimi previsti dalla norma EN 676 misurati sul tubo della fiamma di controllo.
In occasione della scelta del bruciatore si deve tenere conto del rendimento energetico della caldaia.
Calcolo della potenza della caldaia:

$$Q_F = \frac{Q_N}{\eta} x 100$$

Q_F = potenza della caldaia (kW)
Q_N = potenza nominale della caldaia (kW)
η = rendimento energetico della caldaia (%)

Chiarimenti sulla denominazione:
P = PROTRON
G = gas naturale / GPL
2 = dimensioni impianto
210 = numero di identificazione potenza in kW
KN = lunghezza testa di combustione normale
KL = lunghezza testa di combustione lunga

Werkingsgebied
Het werkingsgebied toont het branderbelasting afhankelijk van de druk in de verbrandingsruimte. Het stemt overeen met de maximale waarden conform EN 676 gemeten op de testvlambuis.
Bij de keuze van de brander dient rekening te worden gehouden met het ketelrendement.
Berekening van het branderbelasting:

$$Q_F = \frac{Q_N}{\eta} x 100$$

Q_F = Branderbelasting (kW)
Q_N = Nominaal ketelvermorgen (kW)
η = Ketelrendement (%)

Uitleg bij type-aanduiding:
P = PROTRON
G = Aardgas / vloeibaar gas
2 = Serie / Bouwgrootte
210 = Branderbelasting referentie in kW
KN = Branderkoplengte normaal
KL = Branderkoplengte lang

Power graphs
The power graph shows burner output as a function of combustion chamber pressure. It corresponds to the maximum values specified by EN 676 measured at the test fire tube.
Boiler efficiency should be taken into consideration when selecting the burner.
Calculation of burner output:

$$Q_F = \frac{Q_N}{\eta} x 100$$

Q_F = Burner output (kW)
Q_N = Rated boiler output(kW)
η = Boiler efficiency (%)

Note on type designation:
P = PROTRON
G = Natural gas/liquid gas
2 = Size
210 = Output value in kW
KN = Normal burner head length
KL = Long burner head length

P2.xxx G-U

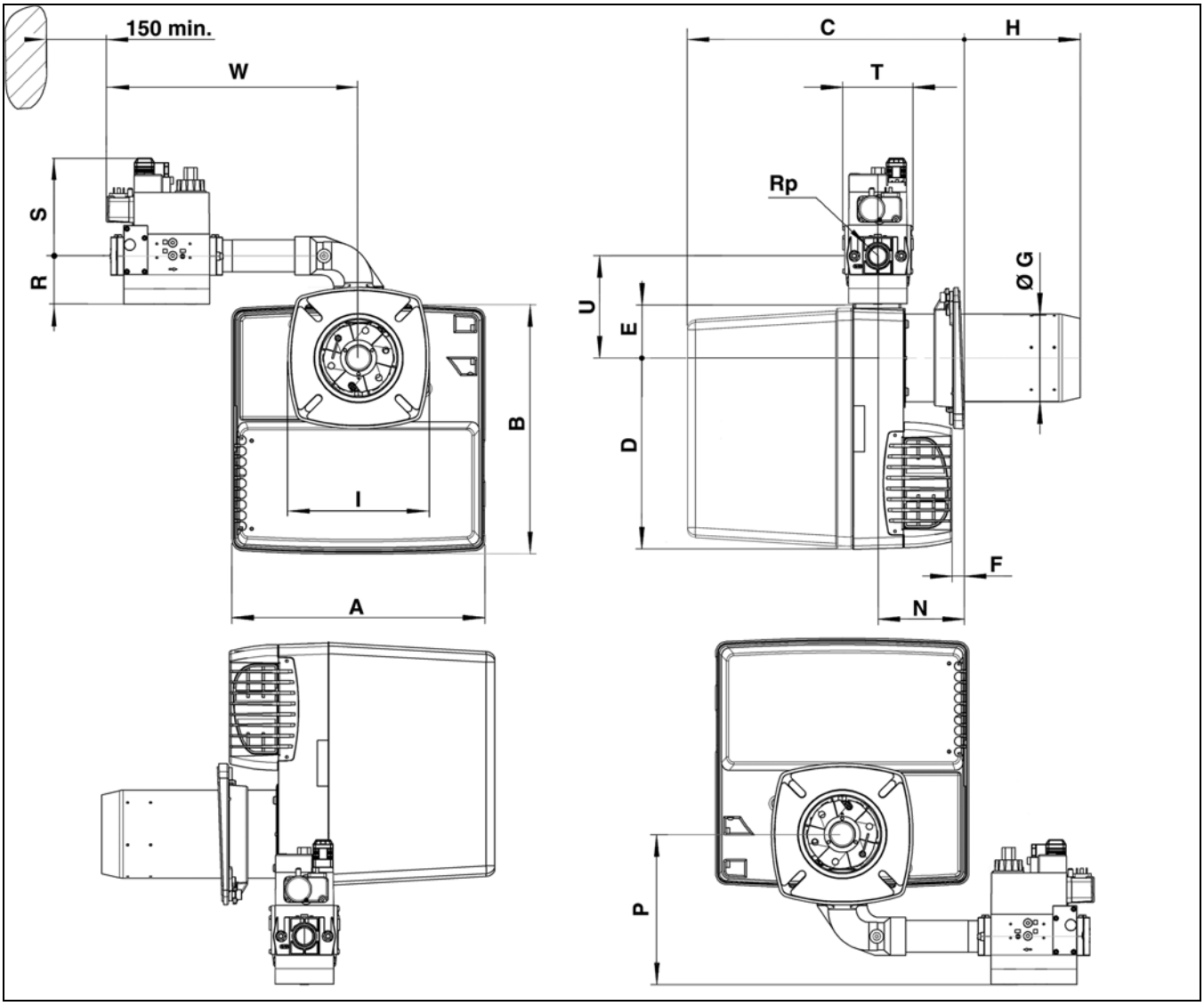

	A	B	C		D	E	F	Ø G	H		I	N	P	Rp	R	S	T	U	W
			KN	KL					KN	KL									
P2.120 G-U - d3/4'' - Rp3/4''	331	325	365…485	365…605	256	69	15 min.	100	30…150	30…270	185 x 185	113 min.	179	3/4"	46	140	120	133	330
P2.120 G-U - d1''1/4 - Rp1''1/4								115					188	1"1/4	55	160	145		360
P2.160/210 G-U - d3/4'' - Rp3/4''								100					179	3/4"	46	140	120		330
P2.160/210 G-U - d1''1/4 - Rp1''1/4								115					188	1"1/4	55	160	145		360

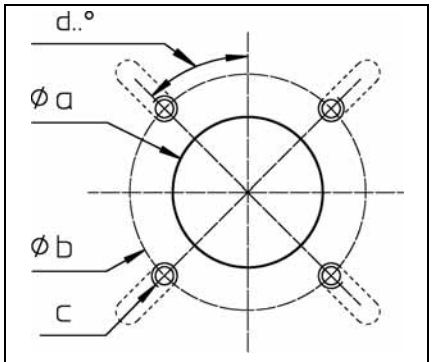

Ø a	Ø b	c	d
120 - 135	150 - 184	M8	45°

P2.xxx G-U/TC

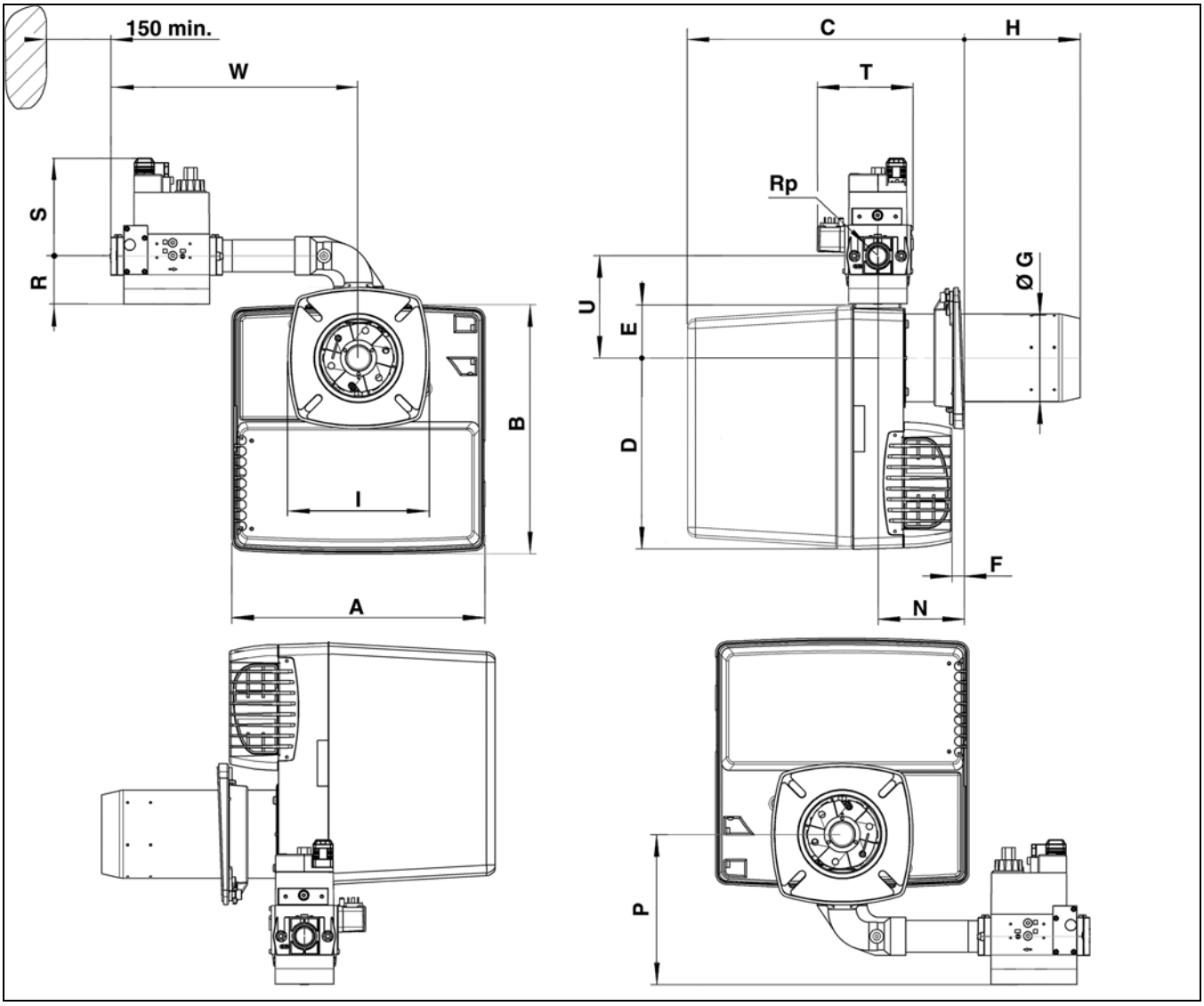

	A	B	C		D	E	F	Ø G	H		I	N	P	Rp	R	S	T	U	W
			KN	KL					KN	KL									
P2.120 G-U/TC - d3/4'' - Rp3/4''	331	325	365…485	365…605	256	69	15 min.	100	30…150	30…270	185 x 185	113 min.	179	3/4"	46	140	165	133	330
P2.120 G-U/TC - d1''1/4 - Rp1''1/4								115					188	1"1/4	55	160	190		360
P2.160/210 G-U/TC - d3/4'' - Rp3/4''								100					179	3/4"	46	140	165		330
P2.160/210 G-U/TC - d1''1/4 - Rp1''1/4								115					188	1"1/4	55	160	190		360

Brennerausführungen
Versions de brûleurs
Esecuzioni di bruciatori
Branderuitvoeringen
Burner executions

Brenner Brûleur Bruciatore Brander Burner		Feuerungsautomaten Coffrets de sécurité Programmatori di comando Branderautomaaten Control units				Technische Daten Données techniques Dati tecnici Technische gegevens Technical data					
Brennertyp Type brûleur Tipo bruciatore Brandertyp Burner type	Art. Nr.	Typ	Art. Nr.	Funktion Fonctionnement Funzionamento Functie Function		TS [sec]	TVB1 [sec]	TVB2 [sec]	TNB [sec]	Dichteprüfung Contrôle étanch. Controllo tenuta Gaslek test Tightness control	MDL
P2.120 G-U/TC / KN	3834190	TCG	65300226	Standard	Sta	3	24	----	----	on	----
P2.160 G-U/TC / KN	3834197	141.00									
P2.210 G-U/TC 3/4" / KN	3834202										
P2.210 G-U/TC 1"1/4 / KN	3834244										
P2.120 G-U/TC / KL	3834192										
P2.160 G-U/TC / KL	3834199										
P2.210 G-U/TC 3/4" KL	3834203										
P2.210 G-U/TC 1"1/4 KL	3834246										
P2.120 G-U / KN	3834189	TCG	65300838	Standard	Sta	3	24	----	----	off	----
P2.160 G-U / KN	3834196	141.02									
P2.210 G-U 3/4" / KN	3834200										
P2.210 G-U 1"1/4 / KN	3834243										
P2.120 G-U / KL	3834191										
P2.160 G-U / KL	3834198										
P2.210 G-U 3/4" KL	3834201										
P2.210 G-U 1"1/4 KL	3834245										
P2.120 G-U/TC / KN	383xxxx	TCG	65000158	Nachbelüftung	NB 90	3	24	----	90	on	----
P2.160 G-U/TC / KN	383xxxx	151.03		Post ventilation							
P2.210 G-U/TC / KN	383xxxx			Postventilazione							
P2.120 G-U/TC / KL	383xxxx			Naventilatie							
P2.160 G-U/TC / KL	383xxxx			Post purge							
P2.210 G-U/TC / KL	383xxxx			/ TNB 90 sec							
P2.120 G-U/TC / KN	383xxxx	TCG	65300667	Schnellstart m. Motordauerlauf	SS/MDL	3	30	4,5	----	on	on
P2.160 G-U/TC / KN	383xxxx	161.04		Quickstart avec ventilation perm.							
P2.210 G-U/TC / KN	383xxxx			QS con ventilazione perm.							
P2.120 G-U/TC / KL	383xxxx			QS met continue ventilatie							
P2.160 G-U/TC / KL	383xxxx			QS w . continuous ventil.							
P2.210 G-U/TC / KL	383xxxx			/ TVB 30 sec							
P2.120 G-U/TC / KN	383xxxx	TCG	65000161	Schnellstart m. Motordauerlauf	SS/MDL	3	60	4,5	----	on	on
P2.160 G-U/TC / KN	383xxxx	161.05		Quickstart avec ventilation perm.							
P2.210 G-U/TC / KN	383xxxx			QS con ventilazione perm.							
P2.120 G-U/TC / KL	383xxxx			QS met continue ventilatie							
P2.160 G-U/TC / KL	383xxxx			QS w . continuous ventil.							
P2.210 G-U/TC / KL	383xxxx			/ TVB 60sec							
P2.120 G-U/TC / KN	383xxxx	TCG	65000162	Schnellstart m. langer Vorbelüfung	SS/LVB	3	40	4,5	----	on	----
P2.160 G-U/TC / KN	383xxxx	161.07		Quickstart avec longue préventil.							
P2.210 G-U/TC / KN	383xxxx			QS con lungha preventilazione							
P2.120 G-U/TC / KL	383xxxx			QS met lange voorventilatie							
P2.160 G-U/TC / KL	383xxxx			QS w . long pre purge							
P2.210 G-U/TC / KL	383xxxx			/ TVB 40 sec							
P2.120 G-U/TC / KN	383xxxx	TCG	65000163	Schnellstart m. langer Vorbelüfung	SS/LVB	3	300	4,5	----	on	----
P2.160 G-U/TC / KN	383xxxx	161.08		Quickstart avec longue préventil.							
P2.210 G-U/TC / KN	383xxxx			QS con lungha preventilazione							
P2.120 G-U/TC / KL	383xxxx			QS met lange voorventilatie							
P2.160 G-U/TC / KL	383xxxx			QS w . long pre purge.							
P2.210 G-U/TC / KL	383xxxx			/ TVB 300 sec							
P2.120 G-U/TC / KN	383xxxx	TCG	65000164	Schnellstart m. langer Vorbelüfung	SS/LVB	3	600	4,5	----	on	----
P2.160 G-U/TC / KN	383xxxx	161.09		Quickstart avec longue préventil.							
P2.210 G-U/TC / KN	383xxxx			QS con lungha preventilazione							
P2.120 G-U/TC / KL	383xxxx			QS met lange voorventilatie							
P2.160 G-U/TC / KL	383xxxx			QS w . long pre purge							
P2.210 G-U/TC / KL	383xxxx			/ TVB 600 sec							

TS = Sicherheitszeit / Temps de sécurité / Tempo di sicurezza / Veiligheidstijd / Safety time
TVB1 = Vorbelüftungszeit Standard / Temps de préventilation standard / Tempo di pre ventilazione standard / Voorventilatietijd / Pre Purge Time
TVB2 = Vorbelüftungszeit Schnellstart / Temps de préventilation quickstart / Tempo di pre ventilazione QS / Voorventilatietijd QS / Pre Purge Time Q
TNB = Nachbelüftungszeit / Temps de post ventilation / Tempo di post ventilazione / Naventilatietijd / Post purge time
MDL = Motordauerlauf / Ventilation perm. / Ventilazione perm. / Continue ventilatie / Continuous ventil.

P2.120 G-U(TC)
P2.160 G-U(TC)
P2.210 G-U(TC)

Elektro- und Hydraulikschema
Schémas électrique et hydraulique
Schemi elettrico e idraulico
Elektrische en hydraulische schema
Electric and hydraulic diagrams

P2.xxx G-U 4201 1009 6500
P2.xxx G-U/TC..... 4201 1009 6400

P2.120 G-U		
d3/4" - Rp3/4"	KN	3 834 189
d3/4" - Rp3/4"	KL	3 834 191
P2.160 G-U		
d3/4" - Rp3/4"	KN	3 834 196
d3/4" - Rp3/4"	KL	3 834 198
P2.210 G-U		
d3/4" - Rp3/4"	KN	3 834 200
d3/4" - Rp3/4"	KL	3 834 201
d1"1/4 - Rp1"1/4	KN	3 834 243
d1"1/4 - Rp1"1/4	KL	3 834 245
P2.120 G-U/TC		
d3/4" - Rp3/4"	KN	3 834 190
d3/4" - Rp3/4"	KL	3 834 192
P2.160 G-U/TC		
d3/4" - Rp3/4"	KN	3 834 197
d3/4" - Rp3/4"	KL	3 834 199
P2.210 G-U/TC		
d3/4" - Rp3/4"	KN	3 834 202
d3/4" - Rp3/4"	KL	3 834 203
d1"1/4 - Rp1"1/4	KN	3 834 244
d1"1/4 - Rp1"1/4	KL	3 834 246

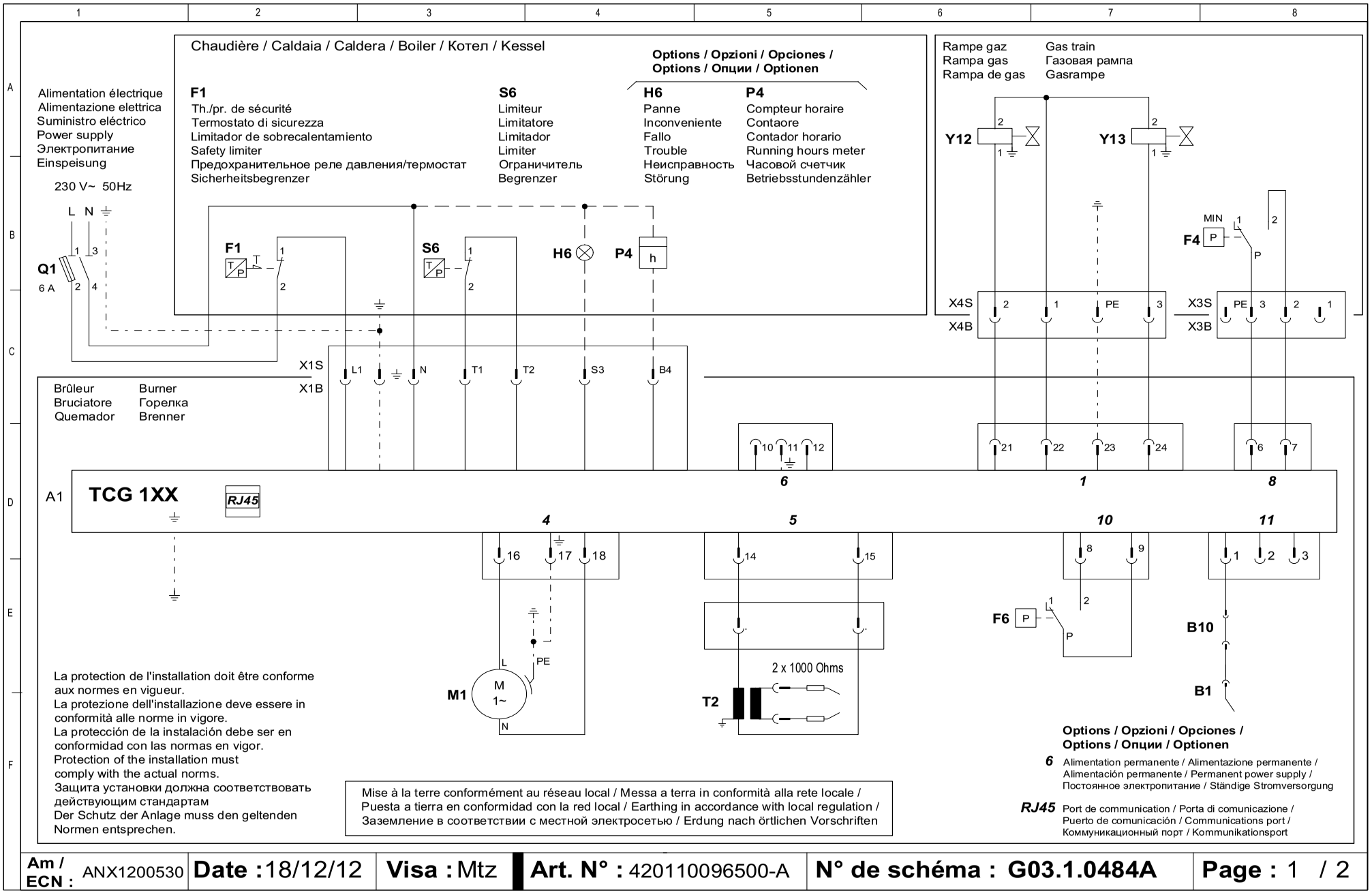
Chaudière / Caldaia / Caldera / Boiler / Котел / Kessel
Options / Opzioni / Opciones / Options / Опции / Optionen
F1
Th./pr. de sécurité
Termostato di sicurezza
Limitador de sobrecalentamiento
Safety limiter
Предохранительное реле давления/термостат
Sicherheitsbegrenzer
S6
Limiteur
Limitatore
Limitador
Limiter
Ограничитель
Begrenzer
H6
Panne
Inconveniente
Fallo
Trouble
Неисправность
Störung
P4
Compteur horaire
Contaore
Contador horario
Running hours meter
Часовой счетчик
Betriebsstundenzähler
Alimentation électrique
Alimentazione elettrica
Suministro eléctrico
Power supply
Электропитание
Einspeisung
230 V~ 50Hz
Q1
6 A
Rampe gaz
Rampa gas
Rampa de gas
Gas train
Газовая рампа
Gasrampe
Y12
Y13
F4
MIN
X4S
X4B
X3S
X3B
X1S
X1B
Brûleur
Bruciatore
Quemador
Burner
Горелка
Brenner
A1
TCG 1XX
RJ45
M1
M
1~
T2
2 x 1000 Ohms
F6
B10
B1
La protection de l'installation doit être conforme aux normes en vigueur.
La protezione dell'installazione deve essere in conformità alle norme in vigore.
La protección de la instalación debe ser en conformidad con las normas en vigor.
Protection of the installation must comply with the actual norms.
Защита установки должна соответствовать действующим стандартам
Der Schutz der Anlage muss den geltenden Normen entsprechen.
Mise à la terre conformément au réseau local / Messa a terra in conformità alla rete locale / Puesta a tierra en conformidad con la red local / Earthing in accordance with local regulation / Заземление в соответствии с местной электросетью / Erdung nach örtlichen Vorschriften
Options / Opzioni / Opciones / Options / Опции / Optionen
6 Alimentation permanente / Alimentazione permanente / Alimentación permanente / Permanent power supply / Постоянное электропитание / Ständige Stromversorgung
RJ45 Port de communication / Porta di comunicazione / Puerto de comunicación / Communications port / Коммуникационный порт / Kommunikationsport
Am / ECN : ANX1200530
Date : 18/12/12
Visa : Mtz
Art. N° : 420110096500-A
N° de schéma : G03.1.0484A
Page : 1 / 2

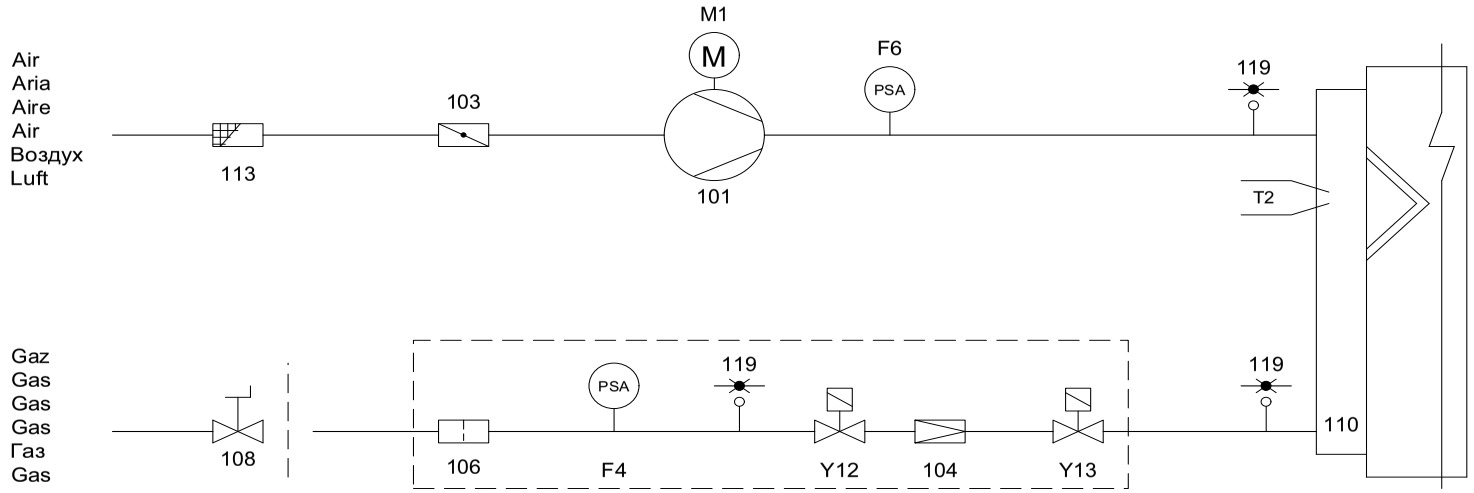

A1	Coffret de contrôle	Programmatore di comando	Caja de mando y seguridad	Control and safety unit	Блок контроля	Feuerungsautomat
B1	Sonde de ionisation	Sonda d'ionizzazione	Sonda de ionizacion	Ionisation sensor	Ионизационный датчик пламени	Ionisationssonde
B10	Pont de mesure	Ponte di misura	Puente de medición	Current bridge	Измерительный мост	Messbrücke
F4	Manostat gaz	Pressostato gas	Presostato de gas	Gas pressure switch	Регулятор давления газа	Gasdruckwaechter
F6	Manostat d'air	Pressostato aria	Presostato de aire	Air pressure switch	Воздушный регулятор	Luftdruckwächter
M1	Moteur du brûleur	Motore del bruciatore	Motor del quemador	Burner motor	Двигатель горелки	Brennermotor
T2	Transformateur d'allumage	Trasformatore d'accensione	Transformador de encendido	Ignition transformer	Трансформатор розжига	Zündtrafo
Y12	Vanne gaz de sécurité	Valvola sicurezza gas	Válvula de seguridad de gas	Safety gas valve	Предохранительный газовый клапан	Gasventilgasseitig
Y13	Vanne gaz principale	Valvola principale gas	Válvula principal de gas	Gas valve burner side	Главный газовый клапан	Gasventil Brennerseitig
101	Ventilateur	Ventilatore	Ventilador	Blower	Вентилятор	Ventilator
103	Volet d'air	Serranda aria	Trampilla de aire	Air flap	Воздушная заслонка	Luftklappe
104	Régulateur de pression	Regolatore della pressione	Regulador de presión	Pressure regulator	Регулятор давления	Druckregler
106	Filtre	Filtro	Filtro	Filter	Фильтр	Filter
108	Vanne manuelle	Valvola manuale	Valvula manual	Manual valve	Ручной клапан	Handventil
110	Injecteur gaz	Ugello gas	Inyector de gas	Gas injector	Газовый инжектор	Gasinjektor
113	Grille d'aspiration	Scatola dell'aria	Caja de aire	Air box protection	Вентиляционная решетка	Ansauggitter
119	Prise pression	Presa pressione	Toma de presión	Pressure take-off	Точка измерения давления	Messnippel

Am / ECN : ANX1200530	**Date :** 18/12/12	**Visa :** Mtz	**Art. N° :** 420110096500-A	**N° de schéma : G03.1.0484A**	**Page :** 2 / 2

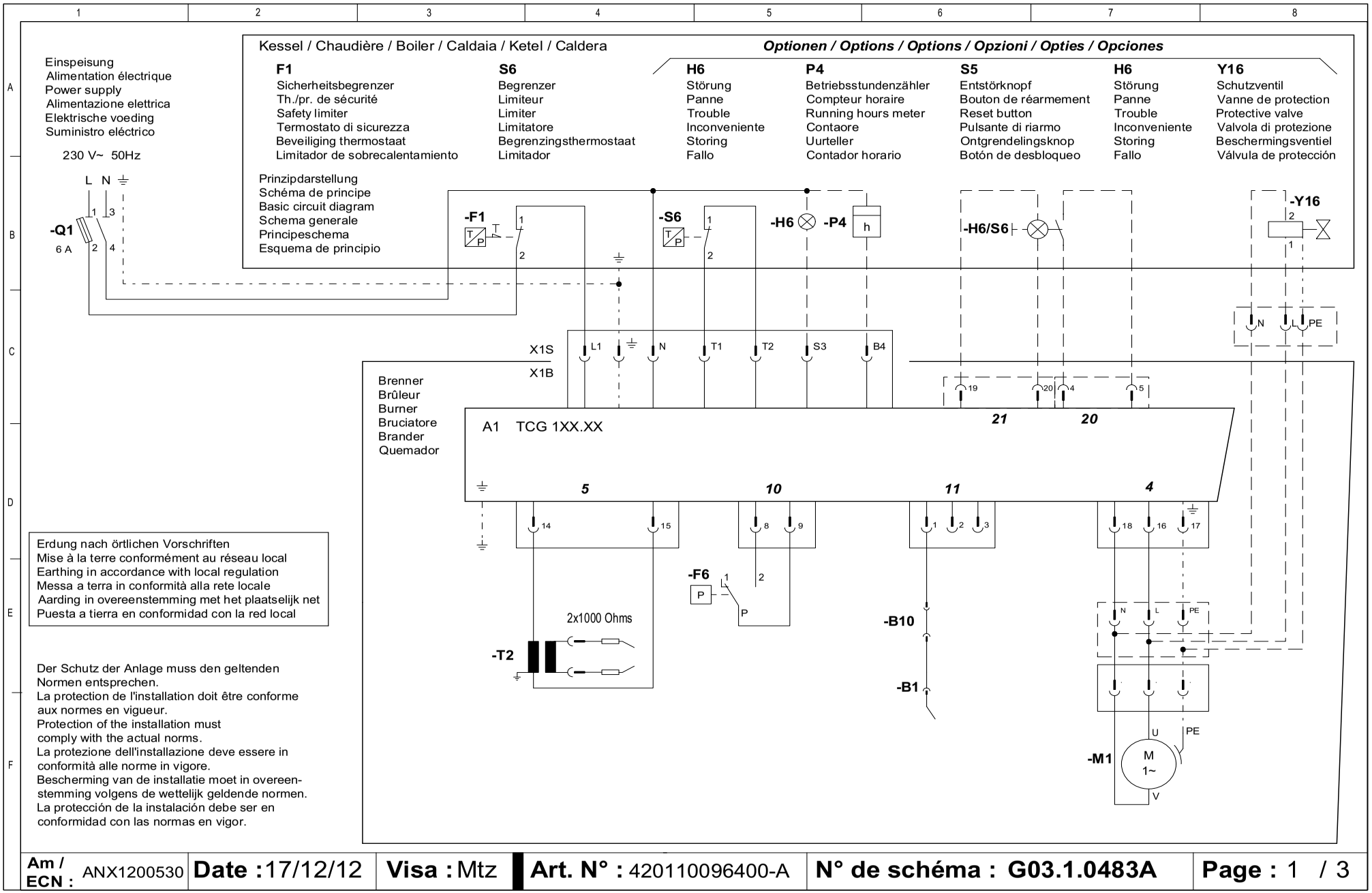

Am / ECN : ANX1200530	Date : 17/12/12	Visa : Mtz	Art. N° : 420110096400-A	N° de schéma : G03.1.0483A	Page : 1 / 3

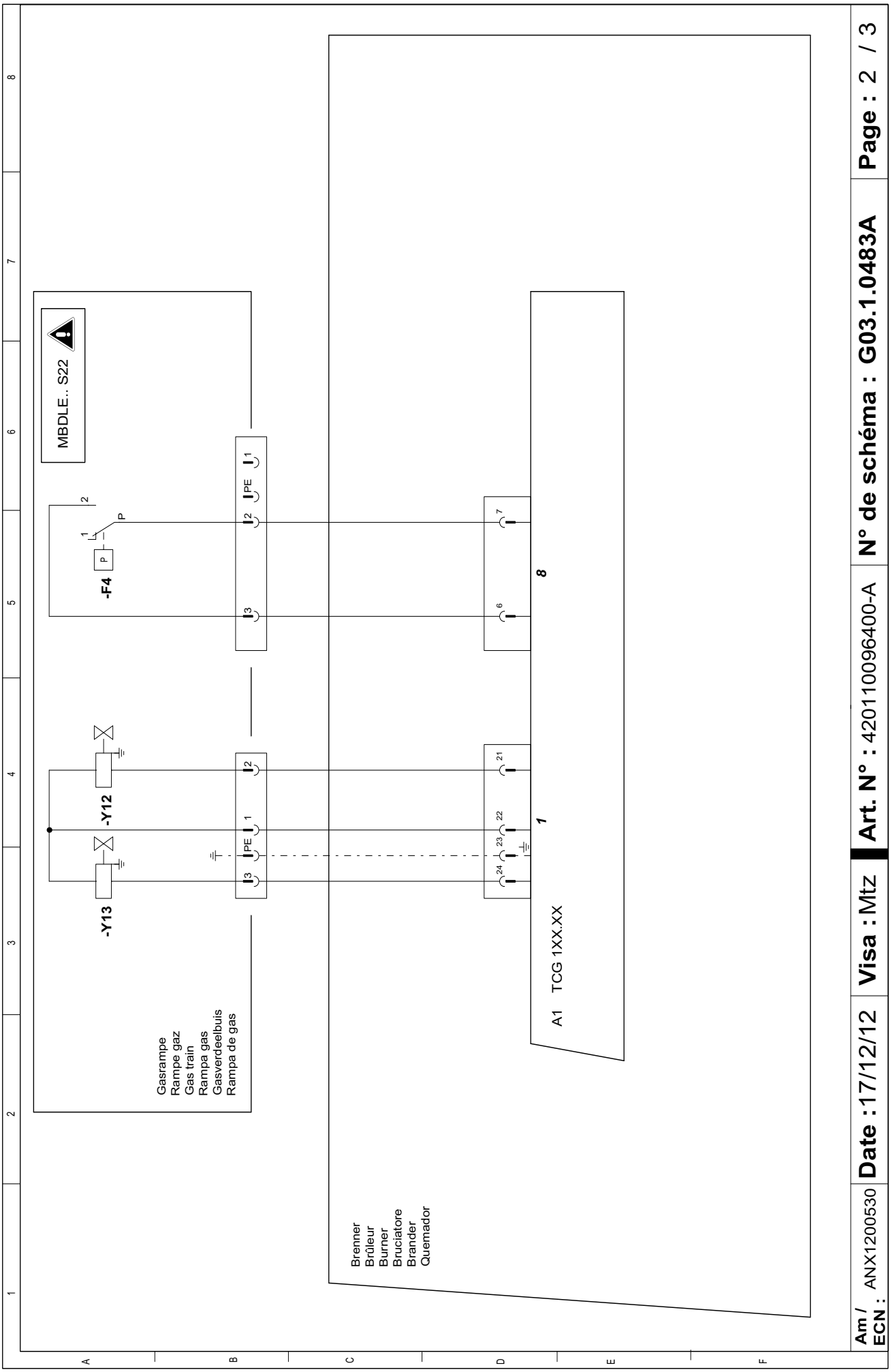
MBDLE... S22
-F4
P
-Y12
-Y13
PE
A1 TCG 1XX.XX
8
1
Gasrampe
Rampe gaz
Gas train
Rampa gas
Gasverdeelbuis
Rampa de gas
Brenner
Brûleur
Burner
Bruciatore
Brander
Quemador
Am / ECN : ANX1200530
Date : 17/12/12
Visa : Mtz
Art. N° : 420110096400-A
N° de schéma : G03.1.0483A
Page : 2 / 3

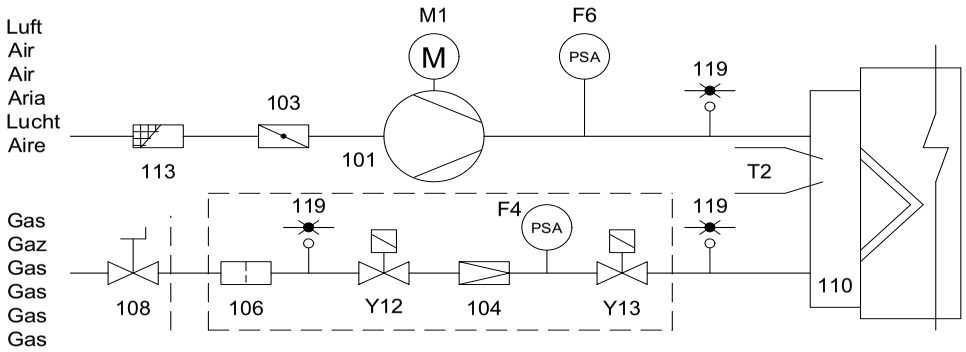

A1	Coffret de contrôle	Programmatore di comando	Caja de mando y seguridad	Control and safety unit	Feuerungsautomat	Bedienings en veiligheidskoffer
B1	Electrode d'ionisation	Elettrodo d'ionizzazione	Electrodo de ionizacion	Ionisation electrode	Ionisationselektrode	Ionisatie-elektrode
B10	Pont de mesure	Ponte di misura	Puente de medición	Current bridge	Messbrücke	Meetbrug
F4	Manostat gaz	Pressostato gas	Presostato de gas	Gas pressure switch	Gasdruckwächter	Gaspressostaat
F6	Manostat d'air	Pressostato aria	Presostato de aire	Air pressure switch	Luftdruckwächter	Luchtpressostaat
M1	Moteur du brûleur	Motore del bruciatore	Motor del quemador	Burner motor	Brennermotor	Brandermotor
T2	Transformateur d'allumage	Trasformatore d'accensione	Transformador de encendido	Ignition transformer	Zündtrafo.	Ontstekingstransformator
Y12	Vanne gaz de sécurité	Valvola sicurezza gas	Válvula de seguridad de gas	Gas safety valve	Gasventilgasseitig	Veiligheidsafsluiter gas
Y13	Vanne gaz principale	Valvola principale gas	Válvula de gas principal	Gas valve burner side	Gasventil Brennerseitig	Hoofdafsluiter gas
101	Ventilateur	Ventilatore	Ventilador	Blower	Ventilator	Ventilator
103	Volet d'air	Serranda aria	Trampilla de aire	Air flap	Luftklappe	Luchtklep
104	Régulateur de pression	Regolatore della pressione	Regulador de presión	Pressure regulator	Druckregler	Drukregelaar
106	Filtre	Filtro	Filtro	Filter	Filter	Filter
108	Vanne manuelle quart de tour	Valvola manuale	Válvula manual	Manual valve	Handventil	Handventiel
110	Injecteur gaz	Ugello gas	Inyector de gas	Gas injector	Gasinjektor	Gasinjector
113	Grille d'aspiration	Scatola dell'aria	Caja de aire	Air box protection	Ansauggitter	Luchthuis
119	Prise pression	Presa pressione	Toma de presion	Pressure take-off	Messnippel	Meetnippel

Am / ECN : ANX1200530	**Date :** 17/12/12	**Visa :** Mtz	**Art. N° :** 420110096400-A	**N° de schéma : G03.1.0483A**	**Page :** 3 / 3

ERSATZTEILKATALOG
GASBRENNER
Gerätemodelle
CB-P2G-U(TC)

R8220097-01 - 01/07/2014

Spalte	Artikelnr	Betroffene Modelle	Baubeginn	Bauende
1	3834189	CB-P2.120G-U/TCG D111-3/4¨ KN	03-2014	
2	3834191	CB P2.120G-U/TCG D111-3/4¨ KL	03-2014	
3	3834196	CB P2.160G-U/TCG D111-3/4¨ KN	03-2014	
4	3834198	CB P2.160G-U/TCG D111-3/4¨ KL	03-2014	
5	3834200	CB-P2.210G-U/TCG D113-3/4¨ KN	03-2014	
6	3834201	CB-P2.210G-U/TCG D113-3/4¨ KL	03-2014	
7	3834243	CB-P2.210G-U/TCG d19-1¨1/4¨ KN	03-2014	
8	3834245	CB-P2.210G-U/TCG d19-1¨1/4¨ KL	03-2014	
9	3834190	CB-P2.120G-U/TCG D112-3/4¨ /TC KN	03-2014	
10	3834192	CB-P2.120G-U/TCG D112-3/4¨ /TC KL	03-2014	
11	3834197	CB-P2.160G-U/TCG D112-3/4¨ /TC KN	03-2014	
12	3834199	CB-P2.160G-U/TCG D112-3/4¨ /TC KL	03-2014	
13	3834202	CB-P2.210G-U/TCG D114-3/4¨ /TC KN	03-2014	
14	3834203	CB-P2.210G-U/TCG D114-3/4¨ /TC KL	03-2014	
15	3834244	CB-P2.210G-U/TCG d110-1¨1/4 /TC KN	03-2014	
16	3834246	CB-P2.210G-U/TCG d110-1¨1/4 /TC-KL	03-2014	

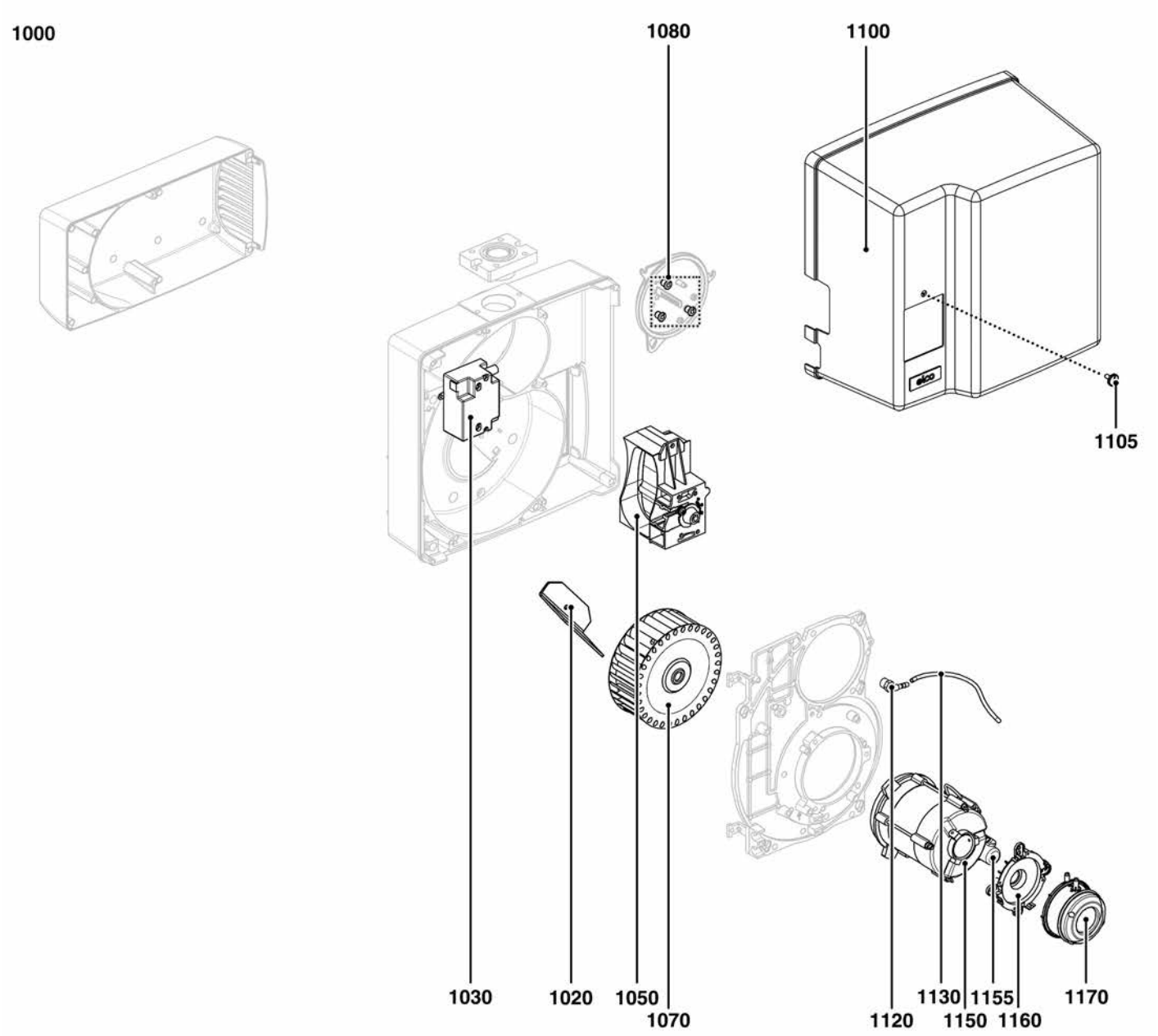
1000
1080
1100
1105
1030
1020
1050
1070
1120
1130
1150
1155
1160
1170

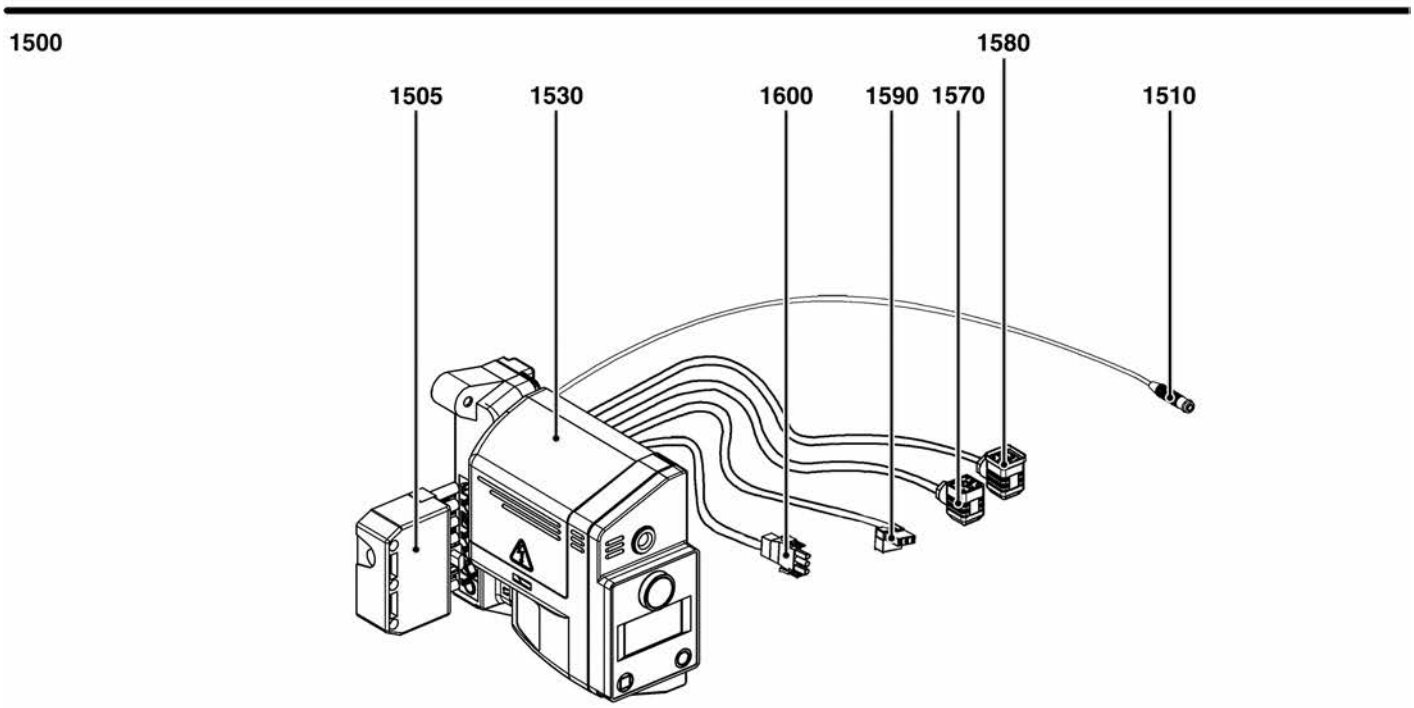
1500
1505
1530
1600
1590
1570
1580
1510

	Bezeichnung	Artikel Nr.	Typ	P2.120G-U D15-¾"-RP¾"-KN	P2.120G-U D15-¾"-RP¾"-KL	P2.160G-U D15-¾"-RP¾"-KN	P2.160G-U D15-¾"-RP¾"-KL	P2.210G-U D15-¾"-RP¾"-KN	P2.210G-U D15-¾"-RP¾"-KL	P2.210G-U d19-1"¼/RP1"¼-KL	P2.210G-U 1"¼/RP1"¼-KN	P2.120G-U D16-¾"-RP¾"TC-KN	P2.120G-U D16-¾"-RP¾"TC-KL	P2.160G-U D16-¾"-RP¾"TC-KN	P2.160G-U D16-¾"-RP¾"TC-KL	P2.210G-U D16-¾"-RP¾"TC-KN	P2.210G-U D16-¾"-RP¾"TC-KL	P2.210G-U D16-3/4"-RP3/4"TC-KN	P2.210G-U D16-3/4"-RP3/4"TC-KL	P2.210G-U d110-1"¼ TC-KN	P2.210G-U d110-1"¼ TC-KL			
				1	2	3	4	5	6	7	8	9	10	11	12	13	14	15	16	17	18	Ab	bis
1000	**BRENNERGEHAEUSE**																						
1020	ANSAUGLUFTFUEHRUNG D.146 (METALL)	65301112		●	●							●	●										
	ANSAUGLUFTFÜHRUNG	13023270				●	●	●	●	●	●			●	●	●	●	●	●				
1030	ZUENDTRAFO EBI 2X7,5 230V	13009663		●	●	●	●	●	●	●	●	●	●	●	●	●	●	●	●				
1050	LUFTKLAPPE	13018138		●	●	●	●	●	●	●	●	●	●	●	●	●	●	●	●				
1070	VENTILATORRAD D133X42 d12,7	65301056		●	●							●	●										
	VENTILATORRAD D146X52 d12,7	13010012				●	●	●	●	●	●			●	●	●	●	●	●				
1080	TUELLE	13010058		●	●	●	●	●	●	●	●	●	●	●	●	●	●	●	●				
1090	DECKPLATTE	13023269		●	●	●	●	●	●	●	●	●	●	●	●	●	●	●	●				
1100	BRENNERHAUBE P2 1-STUFIG KUB.	65301266		●	●	●	●	●	●	●	●	●	●	●	●	●	●	●	●				
1105	FLACHKOPFSCHRAUBE M5X15	65300519		●	●	●	●	●	●	●	●	●	●	●	●	●	●	●	●				
1120	MESSNIPPEL GERADE	13013352		●	●	●	●	●	●	●	●	●	●	●	●	●	●	●	●				
1130	SCHLAUCH D.4/7 LG. 500 MM	13015497		●	●	●	●	●	●	●	●	●	●	●	●	●	●	●	●				
1150	MOTOR 0,13KW230V D12,7	13010014						●	●	●	●					●	●	●	●				
	MOTOR 0,16KW230V D12,7	13009981		●	●	●	●					●	●	●	●								
1155	KONDENSATOR 5MF ALU M8	65325038		●	●	●	●	●	●	●	●	●	●	●	●	●	●	●	●				
1160	HALTER D.32 LUFTDRUCKWAECHTER	13020723		●	●	●	●	●	●	●	●	●	●	●	●	●	●	●	●				
1170	LUFTDRUCKWÄCHTER 0,5-5MBAR	13020502		●	●	●	●					●	●	●	●								
	LUFTDRUCKWÄCHTER 1-10MBAR	13020722						●	●	●	●					●	●	●	●				
1500	**ELEKTROTEIL**																						
1505	WIELAND STECKER 7P.	13010523		●	●	●	●	●	●	●	●	●	●	●	●	●	●	●	●				
1510	IONISATIONSKABEL LG.350+STECKER	65300158		●	●	●	●	●	●	●	●	●	●	●	●	●	●	●	●				
1530	FEUERUNGSAUTOMAT TCG 141.00	65300226										●	●	●	●	●	●	●	●				
	FEUERUNGSAUTOMAT TCG 141.02noTC	65300838		●	●	●	●	●	●	●	●												
1570	V-KABEL 4X0.75-1500 GASVENTIL	13011101		●	●	●	●	●	●	●	●	●	●	●	●	●	●	●	●				
1580	KABEL M. STECKER/GASDRUCKWÄCHTER	13023698		●	●	●	●	●	●	●	●	●	●	●	●	●	●	●	●				
1590	KABEL M. STECKER/ZÜNDTRAFO	65300619		●	●	●	●	●	●	●	●	●	●	●	●	●	●	●	●				
1600	KABEL M. STECKER/MOTOR	13010519		●	●	●	●	●	●	●	●	●	●	●	●	●	●	●	●				

2000

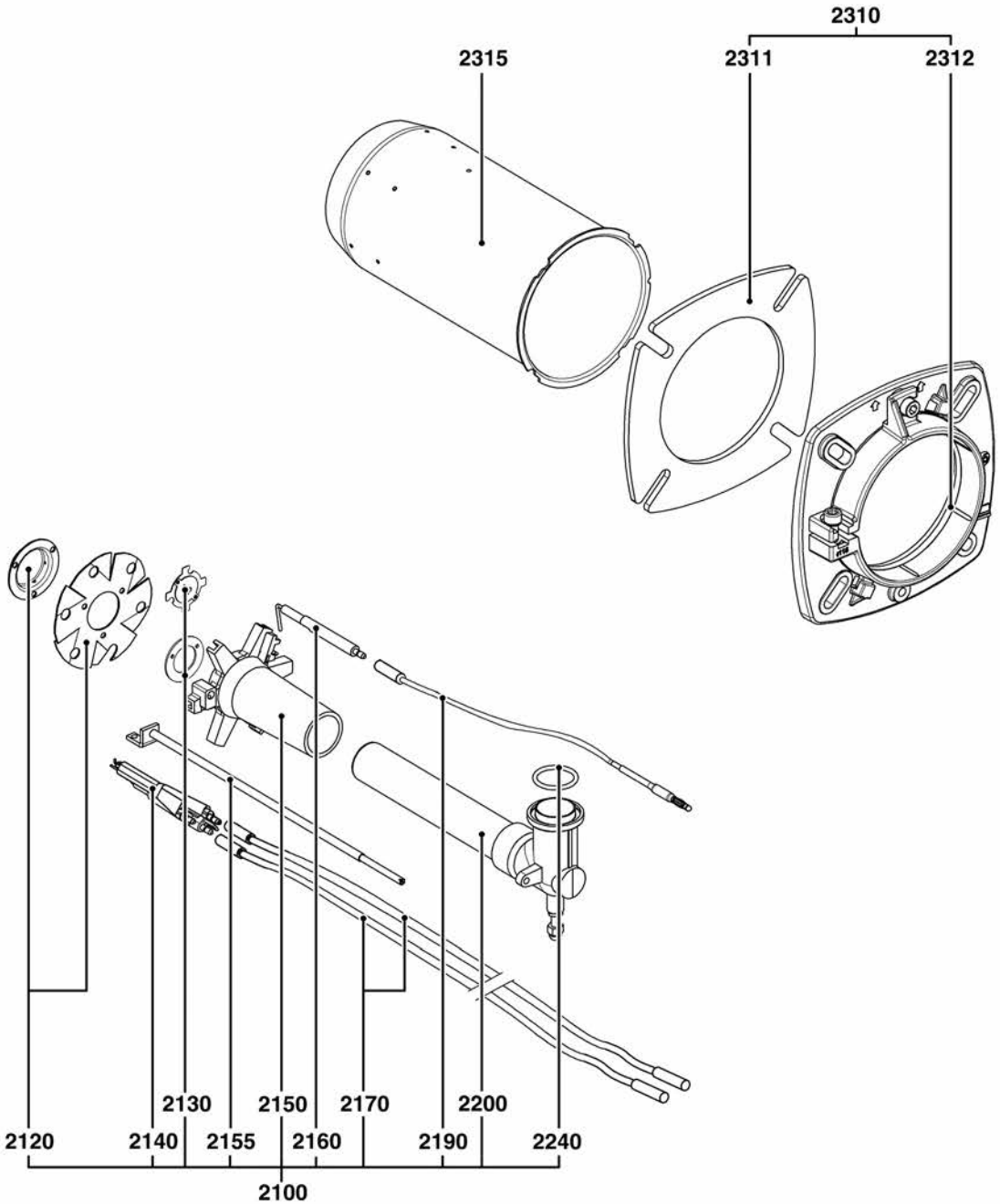
2310
2315
2311
2312
2130
2150
2170
2200
2120
2140
2155
2160
2190
2240
2100

5000

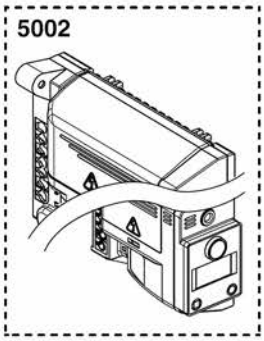
5002

	Bezeichnung	Artikel Nr.	Typ	1 P2.120G-U D15-¾"-RP¾"-KN	2 P2.120G-U D15-¾"-RP¾"-KL	3 P2.160G-U D15-¾"-RP¾"-KN	4 P2.160G-U D15-¾"-RP¾"-KL	5 P2.210G-U D15-¾"-RP¾"-KN	6 P2.210G-U D15-¾"-RP¾"-KL	7 P2.210G-U D15-¾"-RP¾"-KN	8 P2.210G-U d19-1"¼"RP1"¼"-KL	9 P2.120G-U 1"¼"RP1"¼"-KN	10 P2.120G-U D16-¾"-RP¾"TC-KN	11 P2.120G-U D16-¾"-RP¾"TC-KL	12 P2.160G-U D16-¾"-RP¾"TC-KN	13 P2.160G-U D16-¾"-RP¾"TC-KL	14 P2.210G-U D16-¾"-RP¾"TC-KN	15 P2.210G-U D16-3/4"-RP3/4"TC-KL	16 P2.210G-U d110-1"¼ TC-KN	17 P2.210G-U d110-1"¼ TC-KL	18	Ab	bis
2000	**BRENNKOPF**																						
2100	STERNGASKOPF KPL. MONTIERT T1/KN	65300762		●								●											
	STERNGASKOPF KPL. MONTIERT T1/KN	65300764				●		●		●				●		●		●					
	STERNGASKOPF KPL. MONTIERT T2/KL	65300763			●								●										
	STERNGASKOPF KPL. MONTIERT T2/KL	65300765					●		●		●				●		●		●				
2120	ERDGASDUESE+STAUSCHEIBE	13019123		●	●							●	●										
	GASDÜSE ERDGAS+STAUSCHEIBE	13015802				●	●	●	●	●	●			●	●	●	●	●	●				
2130	DUESE FLUESSIGGAS	13018630				●	●	●	●	●	●			●	●	●	●	●	●				
	DUESE FLUESSIGGAS	13019125		●	●							●	●										
2140	ZUENDELEKTRODE	65300738		●	●	●	●	●	●	●	●	●	●	●	●	●	●	●	●				
2150	STERNGASKOPF D.72	13010532		●	●							●	●										
	STERNGASKOPF D.93	13010023				●	●	●	●	●	●			●	●	●	●	●	●				
2155	REGULIERSTANGE T1/KN	13018033				●		●		●				●		●		●					
	REGULIERSTANGE T1/KN	13022192		●								●											
	REGULIERSTANGE T2/KL	13018034					●		●		●				●		●		●				
	REGULIERSTANGE T2/KL	13022193			●								●										
2160	IONISATIONSELEKTRODE D.6/8X80	13010529		●	●	●	●	●	●	●	●	●	●	●	●	●	●	●	●				
2170	ZUENDKABEL LG.365MM	13013524		●		●		●		●		●		●		●		●					
	ZUENDKABEL LG.510MM	13014990			●		●		●		●		●		●		●		●				
2190	IONISATIONSKABEL L.350MM	13013525		●		●		●		●		●		●		●		●					
	IONISATIONSKABEL L.650 MM	13015121			●		●		●		●		●		●		●		●				
2200	GASROHR+GASBOGEN T1/KN	13018027		●								●											
	GASROHR+GASBOGEN T1/KN	13021643				●		●		●				●		●		●					
	GASROHR+GASBOGEN T2/KL	13018028			●								●										
	GASROHR+GASBOGEN T2/KL	13020258					●		●		●				●		●		●				
2240	O-RING D.30X3	13018089		●	●	●	●	●	●	●	●	●	●	●	●	●	●	●	●				
2310	ANSCHLUSSFLANSCH D.115	13018134		●	●	●	●	●	●	●	●	●	●	●	●	●	●	●	●				
2311	ISOLIERFLANSCH D.115	13018135		●	●	●	●	●	●	●	●	●	●	●	●	●	●	●	●				
2312	DICHTSCHNUR D.115 5X5-377	13020517		●	●	●	●	●	●	●	●	●	●	●	●	●	●	●	●				
2315	FLAMMENROHR D115/100 L230	13018148				●		●		●				●		●		●					
	FLAMMENROHR D115/100 L350	13018149					●		●		●				●		●		●				
	FLAMMENROHR D115/78/75 L230	13020498		●								●											
	FLAMMENROHR D115/78/75 L350	13020499			●								●										
5000	**ZUBEHÖR**																						
5002	FEUERUNGSAUTO. TCG161.04TC+QS30s+Per V.	65300667										●	●	●	●	●	●	●	●				
	FEUERUNGSAUTO. TCG161.05TC+QS60s+Per V.	65000161										●	●	●	●	●	●	●	●				
	FEUERUNGSAUTOM. TCG151.03TC+Post V. 90s	65000158										●	●	●	●	●	●	●	●				
	FEUERUNGSAUTOM. TCG161.07TC+Pre V. 40s	65300306										●	●	●	●	●	●	●	●				
	FEUERUNGSAUTOM. TCG161.08TC+Pre V. 300s	65000163										●	●	●	●	●	●	●	●				
	FEUERUNGSAUTOM. TCG161.09TC+Pre V. 600s	65000164										●	●	●	●	●	●	●	●				

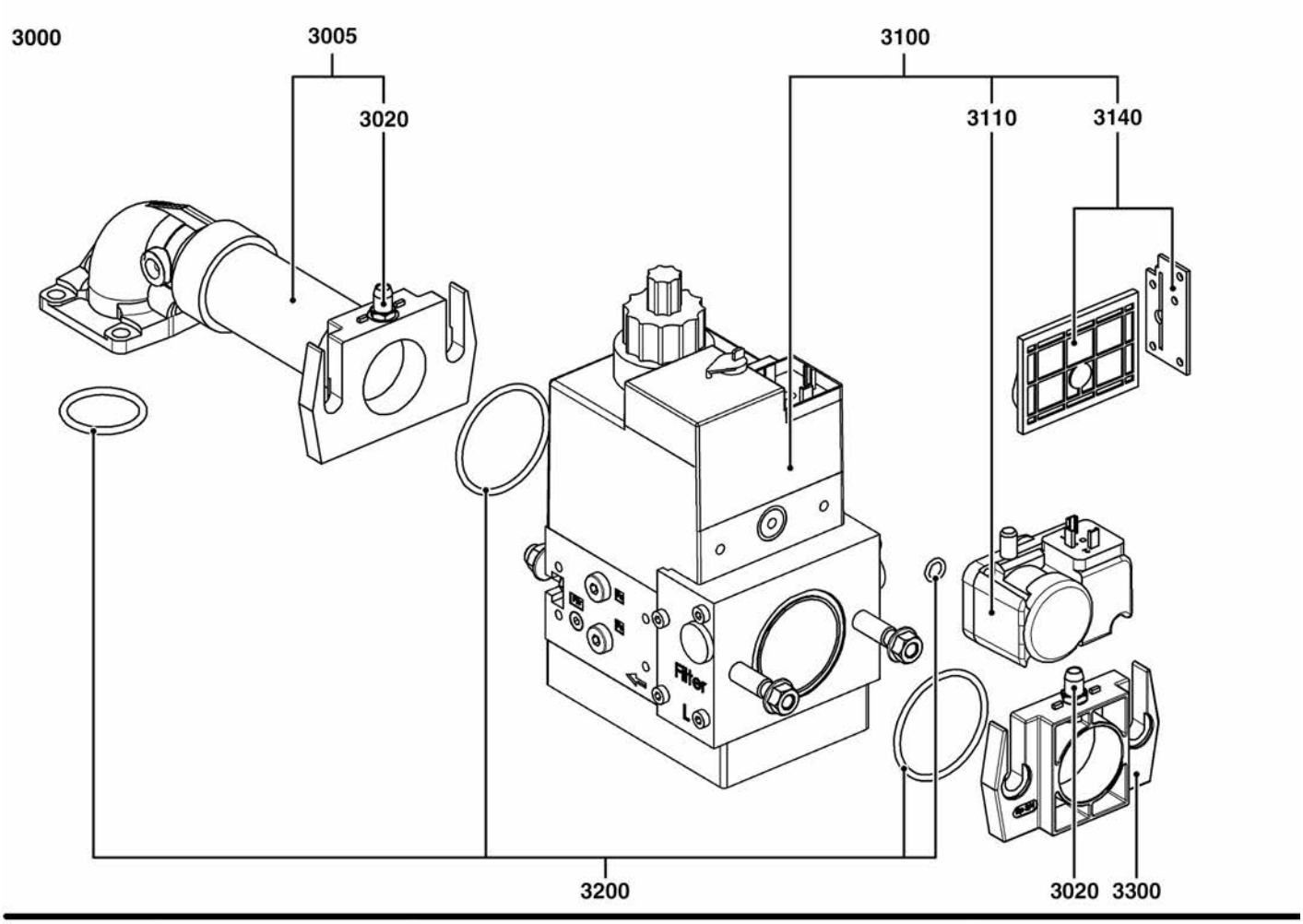
3000
3005
3020
3100
3110
3140
Filter
L
3200
3020
3300

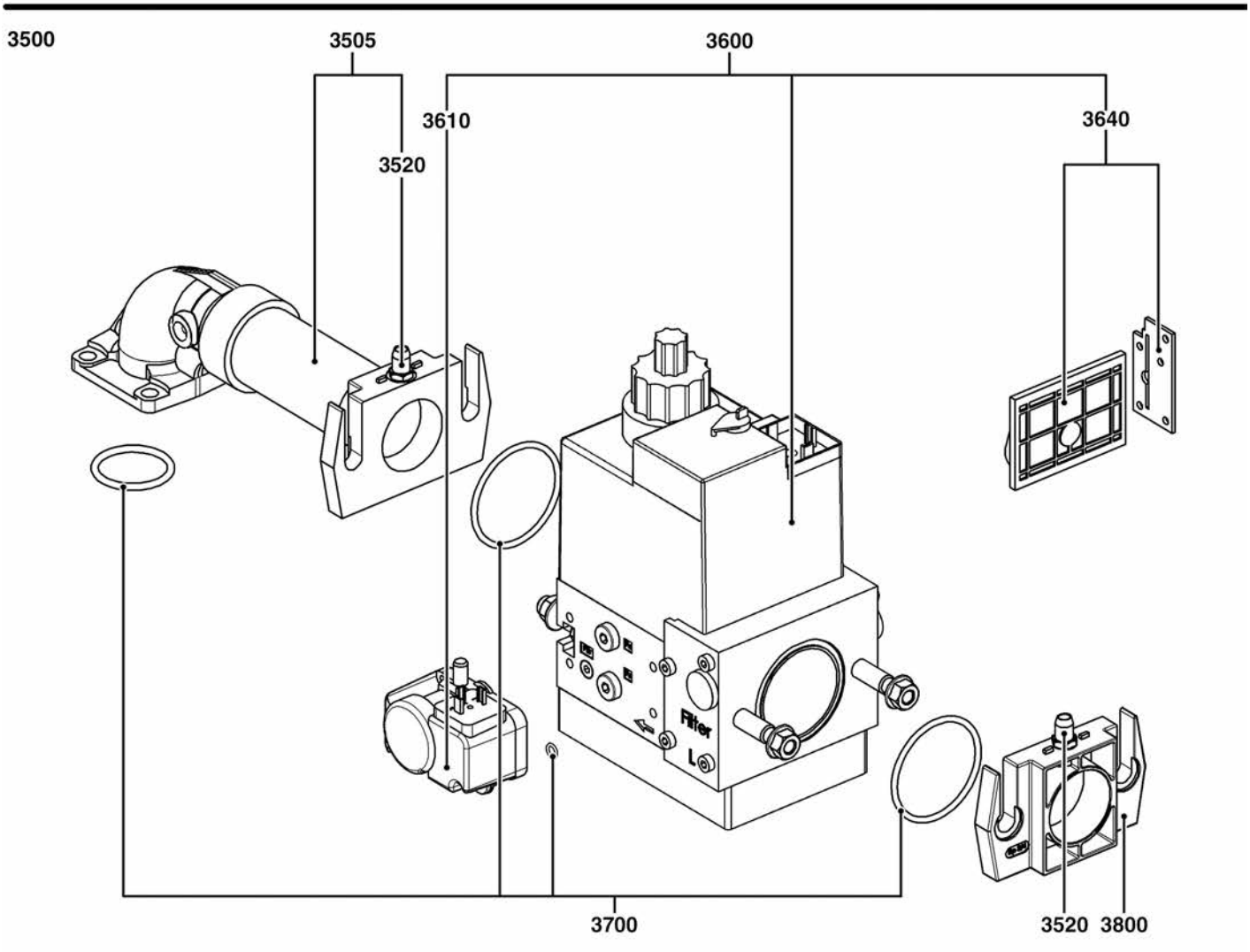
3500
3505
3520
3600
3610
3640
Filter
L
3700
3520
3800

	Bezeichnung	Artikel Nr.	Typ	1 P2.120G-U D15-¾"-RP¾"-KN	2 P2.120G-U D15-¾"-RP¾"-KL	3 P2.160G-U D15-¾"-RP¾"-KN	4 P2.160G-U D15-¾"-RP¾"-KL	5 P2.210G-U D15-¾"-RP¾"-KN	6 P2.210G-U D15-¾"-RP¾"-KL	7 P2.210G-U D15-¾"-RP¾"-KN	8 P2.210G-U d19-1"¼"RP1"¼"-KL	9 P2.120G-U D16-¾"-RP¾"-KN	10 P2.120G-U D16-¾"-RP¾"-KL	11 P2.160G-U D16-¾"-RP¾"-TC-KN	12 P2.160G-U D16-¾"-RP¾"-TC-KL	13 P2.210G-U D16-¾"-RP¾"-TC-KN	14 P2.210G-U D16-¾"-RP¾"-TC-KL	15 P2.210G-U D16-3/4"-RP3/4"TC-KN	16 P2.210G-U D16-3/4"-RP3/4"TC-KL	17 P2.210G-U d110-1"¼ TC-KN	18 P2.210G-U d110-1"¼ TC-KL	Ab	bis
3000	**GASARMATUR**																						
3005	GASANSCHLUSSROHR KPL.	13018098		●	●	●	●	●	●														
	GASANSCHLUSSROHR KPL.	13018623								●	●												
3020	MESSNIPPEL GERADE R1/8	13009722		●	●	●	●	●	●	●	●												
3100	GASVENTIL MBDLE407 B01 S20 RP3/4»	13012424		●	●	●	●	●	●														
	GASVENTIL MBDLE412 B01 S20 RP1»1/4	13020503								●	●												
3110	GASDRUCKWAECHTER GW 150 A5 DIN	13010078		●	●	●	●	●	●	●	●												
3140	FILTEREINSATZ /MB...405/407	13016011		●	●	●	●	●	●														
	FILTEREINSATZ /MB...410/412	13016012								●	●												
3200	O'RING SET /MB...(ZR)DLE 407	13011111		●	●	●	●	●	●														
	O'RING SET /MB...(ZR)DLE 412	13011114								●	●												
3300	EINGANGSFLANSCH MB405/407	13010074		●	●	●	●	●	●														
	EINGANGSFLANSCH MB410/412	13010085								●	●												
3500	**GASARMATUR**																						
3505	GASANSCHLUSSROHR KPL.	13018098										●	●	●	●	●	●						
	GASANSCHLUSSROHR KPL.	13018623																●	●				
3520	MESSNIPPEL GERADE R1/8	13009722										●	●	●	●	●	●	●	●				
3600	GASVENTIL MBDLE407 B01 S22 RP3/4»	13023734										●	●	●	●	●	●						
	GASVENTIL MBDLE412 B01 S22 RP1»1/4	13023735																●	●				
3610	GASDRUCKWÄCHTER GW 10 A5/1 DIN	13023736										●	●	●	●	●	●	●	●				
3640	FILTEREINSATZ /MB...405/407	13016011										●	●	●	●	●	●						
	FILTEREINSATZ /MB...410/412	13016012																●	●				
3700	O'RING SET /MB...(ZR)DLE 407	13011111										●	●	●	●	●	●						
	O'RING SET /MB...(ZR)DLE 412	13011114																●	●				
3800	EINGANGSFLANSCH MB405/407	13010074										●	●	●	●	●	●						
	EINGANGSFLANSCH MB410/412	13010085																●	●				

	6XXXXXXX	FR EN	IT	NL	X
1020	13023270	AILERON RECYCL. ACIER AIR RECYCLING	RICIRCOLO DELL'ARIA	LUCHT GELEIDINGSPLAAT	1
	65301112	RECYCLAGE AIR D.146 (METAL) AIR RECYCLING D.146 (METAL)	CONVOGLIATORE ARIA D.146 (METAL)	LUCHTKRINGLOOP D.146 (METAAL)	1
1030	13009663	ALLUMEUR EBI 2X7,5 230V IGNITION TRANSFO. EBI 2X7,5 230V	TRANSFO. ACC. EBI 2X7,5 230V	ONTSTEKINGSTRAFO EBI 2X7,5 230V	1
1050	13018138	VOLET D'AIR AIR FLAP	SERRANDA DELL'ARIA	LUCHTKLEP	1
1070	13010012	TURBINE D146X52 d12,7 FAN WHEEL D146X52 d12,7	VENTOLA D146X52 d12,7	VENTILATORWIEL D146X52 d12,7	1
	65301056	TURBINE D133X42 d12,7 FAN WHEEL D133X42 d12,7	VENTOLA D133X42 d12,7	VENTILATORWIEL D133X42 d12,7	1
1080	13010058	PASSE FIL GROMMET	PASSAFILO	DRAADDOORVOER	1
1090	13023269	PLAQUETTE TABLEAU DE BORD DASHBOARD PLATE	PIASTRINA CRUSCOTTO	AFDEKPLAAT	1
1100	65301266	CAPOT P2 1-ALLURE CUBIQUE CUBIC COVER P2 1-STAGE	COPERCHIO P2 1-STADIO CUBICO	KAP P2 1-TRAP KUBIEKE	1
1105	65300519	VIS A TETE PLATE M5X15 FLAT HEAD SCREW M5X15	VITE A TESTA PIANA M5X15	PLATKOPSCHROEF M5X15	1
1120	13013352	PRISE DE PRESSION PRESSURE TAP	PRESA DI PRESSIONE	DRUKMEETAANSLUITING	1
1130	13015497	TUYAU D.4/7 LG. 500 MM HOSE D.4/7 LG. 500 MM	TUBO D.4/7 LG. 500 MM	SLANG D.4/7 LG. 500 MM	1
1150	13009981	MOTEUR 0,16KW230V D12,7 MOTOR 0,16KW230V D12,7	MOTORE 0,16KW230V D12,7	MOTOR 0,16KW230V D12,7	1
	13010014	MOTEUR 0,13KW230V D12,7 MOTOR 0,13KW230V D12,7	MOTORE 0,13KW230V D12,7	MOTOR 0,13KW230V D12,7	1
1155	65325038	CONDENSATEUR 5MF ALU M8 CAPACITOR 5MF ALU M8	CONDENSATORE 5MF ALU M8	CONDENSATOR 5MF ALU M8	1
1160	13020723	SUPPORT MANOSTAT AIR AIR PRESSURE SWITCH BASE	SUPPORTO PRESSOSTATO DELL'ARIA	STEUN MANOSTAAT HUBA	1
1170	13020502	MANOSTAT AIR 0,5-5MBAR AIR PRESSURE SWITCH 0,5-5MBAR	PRESSOSTATO ARIA 0,5-5MBAR	LUCHTDRUK SCHAKELAAR 0,5-5MBAR	1
	13020722	MANOSTAT AIR 1-10MBAR AIR PRESSURE SWITCH 1-10MBAR	PRESSOSTATO ARIA 1-10MBAR	MANOSTAAT HUBA 604.92	1
1505	13010523	PRISE WIELAND 7P. WIELAND PLUG 7P.	CONNETTORE MASCHIO 7P.	WIELAND STEKKER 7P.	1
1510	65300158	CABLE IONISATION+PRISE IONISATION CABLE+CONNECT.	CAVO IONIZZAZIONE+CONETT.	KABEL IONISATIE+STEKK.	1
1530	65300226	COFFRET TCG 141.00 CONTROL UNIT TCG 141.00	APPARECCHIATURA TCG 141.00	BRANDERAUTOMAAT TCG 141.00	1
	65300838	COFFRET TCG 141.02noTC CONTROL UNIT TCG 141.02noTC	APPARECCHIATURA TCG 141.02noTC	BRANDERAUTOMAAT TCG 141.02noTC	1
1570	13011101	CABLE VANNE GAZ-4x0,75-1500 GAS VALVE CABLE	CAVO VALVOLA GAS	KABEL GASBLOK	1
1580	13023698	CABLE+PRISE MANOSTAT GAZ CABLE+GAS PRESS.SWITCH CONNEC.	CAVO+PRESA PRESSOSTATO DEL GAS	KABEL + STEKKER GASMANOSTAAT	1
1590	65300619	CABLE+PRISE/ALLUMEUR CABLE+CONNECTOR/IGNITER	CAVO+PRESA/ACCENDITORE	KABEL+STEKKER/ONTSTEEK TRAFO	1
1600	13010519	CÂBLE + PRISE / MOTEUR CABLE+CONNECTOR/MOTOR	CAVO+PRESA/MOTORE	KABEL + STEKKER / MOTOR	1
2100	65300762	LIGNE GAZ EQUIPEE T1/KN GAS LINE WITH FITTINGS T1/KN	LINEA GAS COMPLETA T1/KN	GASLIJN COMPLEET T1/KN	1
	65300763	LIGNE GAZ EQUIPEE T2/KL GAS LINE WITH FITTINGS T2/KL	LINEA GAS COMPLETA T2/KL	GASLIJN COMPLEET T2/KL	1
	65300764	LIGNE GAZ ÉQUIPÉE T1/KN GAS LINE WITH FITTINGS T1/KN	LINEA GAS COMPLETA T1/KN	GASLIJN COMPLEET T1/KN	1
	65300765	LIGNE GAZ ÉQUIPÉE T2/KL GAS LINE WITH FITTINGS T2/KL	LINEA GAS COMPLETA T2/KL	GASLIJN COMPLEET T2/KL	1
2120	13015802	DIFFUSEUR GAZ NATUREL+DEFLECTEUR NATURAL GAS DIFFUSER+TURBULATOR	DIFFUSORE GAS NATURALE+BOCCHETTONE	AARDGAS NOZZLE+STUWPLAAT	1
	13019123	DIFFUSEUR GAZ NATUREL+DEFLECTEUR NATURAL GAS DIFFUSER+TURBULATOR	DIFFUSORE GAS NATURALE+DEFLETTORE	VERSPREIDER AARDGAS+STUWSCHIJF	1
2130	13018630	DIFFUSEUR PROPANE PROPANE DIFFUSER	DIFFUSORE PROPANO	VERSPREIDER PROPAAN	1
	13019125	DIFFUSEUR PROPANE PROPANE DIFFUSER	DIFFUSORE PROPANO	VERSPREIDER PROPAAN	1
2140	65300738	ELECTRODE ALLUMAGE IGNITION ELECTRODE	ELETTRODO DI ACCENSIONE	ONTSTEKINGSELECTRODE	1
2150	13010023	ETOILE D.93 STAR HEAD D.93	STELLA D.93	GASSTER D.93	1

	6XXXXXXX	FR EN	IT	NL	X
	13010532	ETOILE D.72 STAR HEAD D.72	STELLA D.72	GAS HERSTARTVERBINDING	1
2155	13018033	TIGE DE REGLAGE T1/KN ADJUSTMENT SPINDLE T1/KN	ASTINA DI REGOLAZIONE T1/KN	VERSTELSTIFT T1/KN	1
	13018034	TIGE DE REGLAGE T2/KL ADJUSTMENT SPINDLE T2/KL	ASTINA DI REGOLAZIONE T2/KL	VERSTELSTIFT T2/KL	1
	13022192	TIGE DE REGLAGE T1/KN ADJUSTMENT SPINDLE T1/KN	ASTINA DI REGOLAZIONE T1/KN	VERSTELSTIFT T1/KN	1
	13022193	TIGE DE REGLAGE T2/KL ADJUSTMENT SPINDLE T2/KL	ASTINA DI REGOLAZIONE T2/KL	VERSTELSTIFT T2/KL	1
2160	13010529	SONDE IONISATION D.6/8X80 IONISATION PROBE D.6/8X80	SONDA IONIZZAZIONE D.6/8X80	IONISATIEVOELER D.6/8	1
2170	13013524	CABLE ALLUMAGE LG.365MM IGNITION LEAD LG.365MM	CAVO ACCENSIONE LG.365MM	ONTSTEKINGSKABEL LG.365MM	1
	13014990	CABLE D'ALLUMAGE LG.510MM IGNITION LEAD LG.510MM	CAVO ACCENSIONE LG.510MM	ONTSTEKINGSKABEL LG.510MM	1
2190	13013525	CABLE IONISATION L.350MM IONISATION CABLE L.350MM	CAVO IONIZZAZIONE L.350MM	IONISATIE KABEL L.350MM	1
	13015121	CABLE IONISATION LG.650MM IONISATION CABLE LG.650MM	CAVO IONIZZAZIONE LG.650MM	IONISATIEKABEL LG.650MM	1
2200	13018027	TUBE D'AMENÉE GAZ+COUDE T1/KN GAS INLET TUBE+ ELBOW T1/KN	TUBO ADDUZIONE GAS+GOMITO T1/KN	GASTOEVOERBUIS+BOCHT T1/KN	1
	13018028	TUBE D'AMENÉE GAZ+COUDE T2/KL GAS INLET TUBE+ELBOW T2/KL	TUBO ADDUZIONE GAS+GOMITO T2/KL	GASTOEVOERBUIS+BOCHT T2/KL	1
	13020258	TUBE D'AMENÉE GAZ+COUDE T2/KL GAS TUBE+ ELBOW T2/KL	TUBO GAS+GOMITO T2/KL	GASTOEVOERBUIS+BOCHT T2/KL	1
	13021643	TUBE D'AMENÉE GAZ+COUDE T1/KN GAS TUBE+ ELBOW T1/KN	TUBO GAS+GOMITO T1/KN	GASTOEVOERBUIS+BOCHT T1/KN	1
2240	13018089	O-RING D.30X3 O-RING D.30X3	O-RING D.30X3	O-RING D.30X3	1
2310	13018134	BRIDE DE RACCORDEMENT D.115 CONNECTION FLANGE D.115	FLANGIA DI RACCORDO D.115	VERBINDING FLENS D.115	1
2311	13018135	JOINT/FAÇADE CHAUDIERE D.115 GASKET/BOILER FRONT D.115	GUARNIZIONE/LATO FRONTALE CALDAIA D.115	AFDICHTING/KETELFRONT D.115	1
2312	13020517	JOINT TRESSE D.115 5X5-377 MESH GASKETING D.115 5X5-377	GUARNIZIONE INTRECCIATA D.115 5X5-377	GEVLOCHTEN AFDICHTING D.115 5X5-377	1
2315	13018148	TUBE DE FLAMME D115/100 L230 FLAME TUBE D115/100 L230	BOCCAGLIO D115/100 L230	BRANDERBUIS D115/100 L230	1
	13018149	TUBE DE FLAMME D115/100 L350 FLAME TUBE D115/100 L350	BOCCAGLIO D115/100 L350	BRANDERBUIS D115/100 L350	1
	13020498	TUBE DE FLAMME D115/78/75 L230 FLAME TUBE D115/78/75 L230	BOCCAGLIO D115/78/75 L230	BRANDERBUIS D115/78/75 L230	1
	13020499	TUBE DE FLAMME D115/78/75 L350 FLAME TUBE D115/78/75 L350	BOCCAGLIO D115/78/75 L350	BRANDERBUIS D115/78/75 L350	1
3005	13018098	COLLECTEUR CPL. COMPLETE COLLECTOR	COLLETTORE ACC.	GASAANSLUITBUIS COMPLEET	1
	13018623	COLLECTEUR CPL. COMPLETE COLLECTOR	COLLETTORE ACC.	GASAANSLUITBUIS COMPLEET	1
3020	13009722	PRISE PRESSION R1/8 PRESSURE TAKE-OFF R1/8	PRESA PRESSIONE R1/8	AANSLUITSTUK/ AANSLUITING R1/8	1
3100	13012424	VANNE GAZ MBDLE407 B01 S20 RP3/4» GAS VALVE MBDLE407 B01 S20 RP3/4»	VALVOLA GAS MBDLE407 B01 S20 RP3/4»	GASKLEP MBDLE407 B01 S20 RP3/4»	1
	13020503	VANNE GAZ MBDLE412 B01 S20 RP1»1/4 GAS VALVE MBDLE412 B01 S20 RP1»1/4	VALVOLA GAS MBDLE412 B01 S20 RP1»1/4	GASKLEP MBDLE412 B01 S20 RP1»1/4	1
3110	13010078	MANOSTAT GAZ GW 150 A5 DIN GAS PRESSURE SWITCH GW 150 A5 DIN	PRESSOSTATO GAS GW 150 A5 DIN	GASDRUKBEWAKER GW 150 A5 DIN	1
3140	13016011	FILTRE TAMIS /MB...405/407 SCREEN FILTER /MB...405/407	SET FILTRI /MB...405/407	ZEEFFILTER DUNGS MB 405/407	1
	13016012	ELEMENT FILTRANT /MB...410/412 SCREEN FILTER /MB...410/412	SET FILTRI /MB...410/412	ZEEFFILTER /MB...410/412	1
3200	13011111	KIT JOINTS /MB...(ZR)DLE 407 GASKET SET /MB...(ZR)DLE 407	KIT GUARNIZIONI /MB...(ZR)DLE 407	PAKKINGSET /MB...(ZR)DLE 407	1
	13011114	KIT JOINTS /MB...(ZR)DLE 412 O'RING SET /MB...(ZR)DLE 412	KIT GUARNIZIONI /MB...(ZR)DLE 412	PAKKINGSET /MB...(ZR)DLE 412	1
3300	13010074	BRIDE D'ENTRÉE MB405/407 INLET FLANGE MB405/407	FLANGIA INGRESSO MB405/407	FLENS DUNGS MB405/407	1
	13010085	BRIDE D'ENTRÉE MB410/412 INLET FLANGE MB410/412	FLANGIA INGRESSO MB410/412	INLAATFLENS MB410/412	1
3505	13018098	COLLECTEUR CPL. COMPLETE COLLECTOR	COLLETTORE ACC.	GASAANSLUITBUIS COMPLEET	1
	13018623	COLLECTEUR CPL. COMPLETE COLLECTOR	COLLETTORE ACC.	GASAANSLUITBUIS COMPLEET	1

	6XXXXXXX	FR EN	IT	NL	X
3520	13009722	PRISE PRESSION R1/8 PRESSURE TAKE-OFF R1/8	PRESA PRESSIONE R1/8	AANSLUITSTUK/ AANSLUITING R1/8	1
3600	13023734	VANNE GAZ MBDLE407 B01 S22 RP3/4» GAS VALVE MBDLE407 B01 S22 RP3/4»	VALVOLA GAS MBDLE407 B01 S22 RP3/4»	GASKLEP MBDLE407 B01 S22 RP3/4»	1
	13023735	VANNE GAZ MBDLE412 B01 S22 RP1»1/4 GAS VALVE MBDLE412 B01 S22 RP1»1/4	VALVOLA GAS MBDLE412 B01 S22 RP1»1/4	GASKLEP MBDLE412 B01 S22 RP1»1/4	1
3610	13023736	MANOSTAT GAZ GW 10 A5/1 DIN GAS PRESSURE SWITCH GW 10 A5/1 DIN	PRESSOSTATO GAS GW 10 A5/1 DIN	MANOSTAAT GW 10 A5/1 DIN	1
3640	13016011	FILTRE TAMIS /MB...405/407 SCREEN FILTER /MB...405/407	SET FILTRI /MB...405/407	ZEEFFILTER DUNGS MB 405/407	1
	13016012	ELEMENT FILTRANT /MB...410/412 SCREEN FILTER /MB...410/412	SET FILTRI /MB...410/412	ZEEFFILTER /MB...410/412	1
3700	13011111	KIT JOINTS /MB...(ZR)DLE 407 GASKET SET /MB...(ZR)DLE 407	KIT GUARNIZIONI /MB...(ZR)DLE 407	PAKKINGSET /MB...(ZR)DLE 407	1
	13011114	KIT JOINTS /MB...(ZR)DLE 412 O'RING SET /MB...(ZR)DLE 412	KIT GUARNIZIONI /MB...(ZR)DLE 412	PAKKINGSET /MB...(ZR)DLE 412	1
3800	13010074	BRIDE D'ENTRÉE MB405/407 INLET FLANGE MB405/407	FLANGIA INGRESSO MB405/407	FLENS DUNGS MB405/407	1
	13010085	BRIDE D'ENTRÉE MB410/412 INLET FLANGE MB410/412	FLANGIA INGRESSO MB410/412	INLAATFLENS MB410/412	1
5002	65000158	COFFRET TCG 151.03TC+Post V. 90s CONTROL UNIT TCG 151.03TC+Post V. 90s	APPARECCHIATURA TCG 151.03TC+Post V.90s	BRANDERAUTOMAAT TCG 151.03TC+Post V.90s	1
	65000161	COFFRET TCG 161.05TC+QS 60s+Perm V. CTRL UNIT TCG 161.05TC+QS 60s+Perm V.	APPARECCHIATURA TCG161.05TC+QS60s+P. V.	BRANDERAUTOM. TCG 161.05TC+QS60s+P. V.	1
	65000163	COFFRET TCG 161.08TC+Pre V. 300s CONTROL UNIT TCG 161.08TC+Pre V. 300s	APPARECCHIATURA TCG161.08TC+Pre V.300s	BRANDERAUTOMAAT TCG 161.08TC+Pre V. 300s	1
	65000164	COFFRET TCG 161.09TC+Pre V. 600s CONTROL UNIT TCG 161.09TC+Pre V. 600s	APPARECCHIATURA TCG161.09TC+Pre V.600s	BRANDERAUTOMAAT TCG 161.09TC+Pre V. 600s	1
	65300306	COFFRET TCG 161.07TC+Pre V. 40s CONTROL UNIT TCG 161.07TC+Pre V. 40s	APPARECCHIATURA TCG 161.07TC+Pre V. 40s	BRANDERAUTOMAAT TCG 161.07TC+Pre V. 40s	1
	65300667	COFFRET TCG 161.04TC+QS 30s+Perm V. CTRL UNIT TCG 161.04TC+QS 30s+Perm V.	APPARECCHIATURA TCG161.04TC+QS30s+P. V.	BRANDERAUTOM. TCG 161.04TC+QS30s+P. V.	1

ADRESSEN

www.elco.net

VERWENDETE ABKÜRZUNGEN

: Maintenance parts / Pièces d'entretien / Materiali di consumo /
: Piezas de mantenimiento / Hilfsmaterial / Onderhoudsonderdelen

: Wearing parts / Pièces d'usure / Parti di usura
: Piezas de desgaste / Verschleissteile / Slijtageonderdelen

* : Item not stocked, manufactured to order / Article non stocké, fabrication à la demande /
: Articolo non a magazzino, produzione all'ordine / Artículo no almacenado, fabricación previa solicitud /
: Keine Lagerware, wird bei Bedarf bestellt, Artikel niet op voorraad, fabricage op bestelling

TYPENSCHILD

SERIENNUMMER

7 Charakters : 00001 / K A

Fortlaufende Gerätenummer

Vierteljahr : von A auf D

Baujahr : → K → 2003
L → 2004
M → 2005
etc ...

8 Charakters : 00001 / L 09

Fortlaufende Gerätenummer

Baumonat

Baujahr : → K → 2003
L → 2004
M → 2005
etc ...

11 Charakters : 2007 1370 P 07

Baujahr

Baumonat

Baujahr : → P → 2007
R → 2008
S → 2009
T → 2010
U → 2011
W → 2012
X → 2013
Y → 2014
Z → 2015

Fortlaufende Gerätenummer

Die Angaben zu Preislisten bzw. kaufmännischen oder technischen Unterlagen, zu Abbildungen oder Maßangaben sind unverbindlich und nur für einen bestimmten Zeitraum gültig. Der Hersteller behält sich das Rech vor, Änderungen jeder Art in Bezug auf die Darstellung, die Form, die Maße, die Konzeption oder das Material ihrer Produkte vorzunehmen.